YHW 60 TU Window Wall Installation Manual - Field Glazed

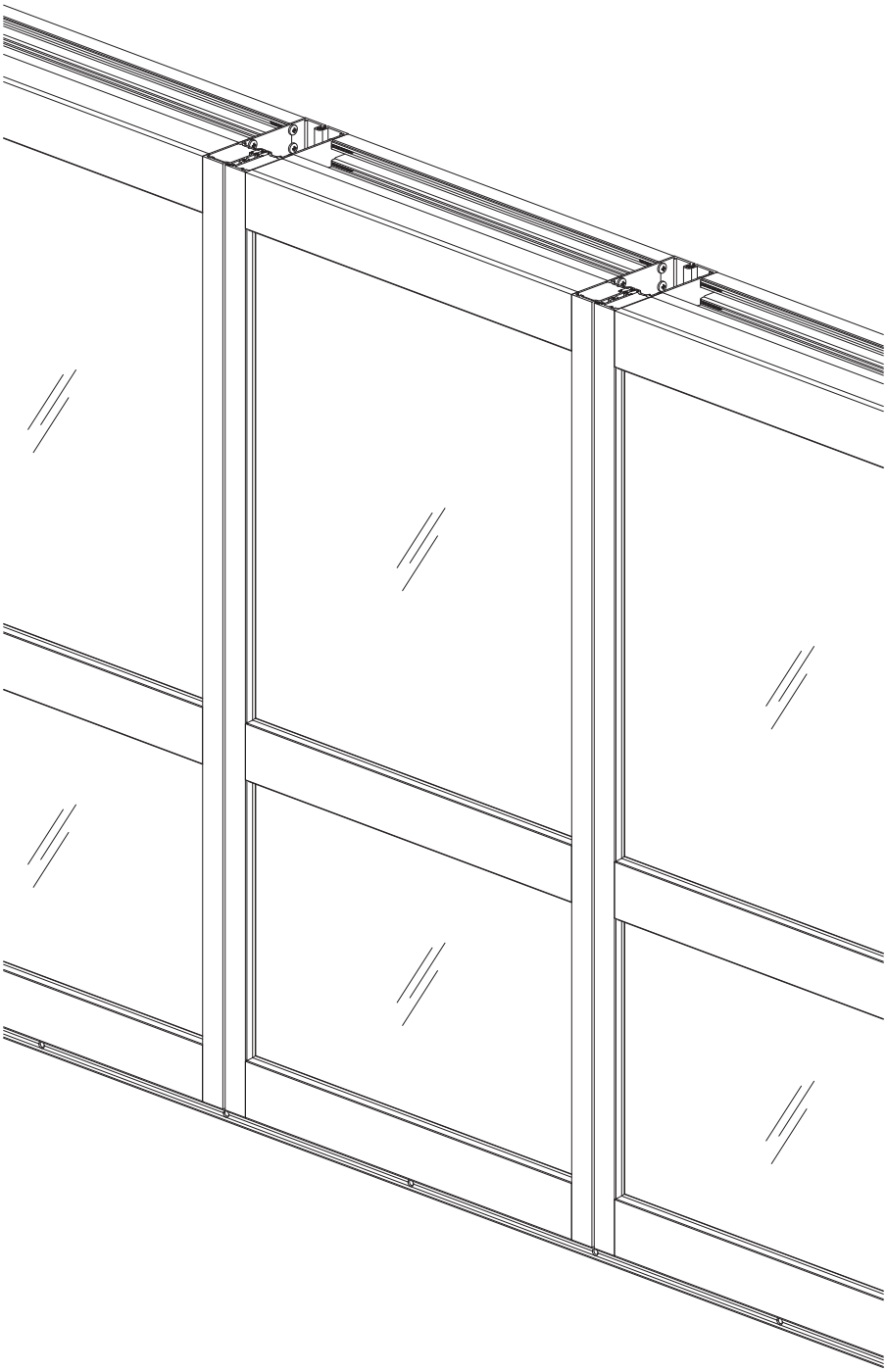

©2026 YKK AP America Inc.

TABLE OF CONTENTS

Installation Notes ..... Page ii

PARTS DESCRIPTION
Framing Members ..... Pages 1 & 2
Accessories ..... Pages 3 & 4

FRAME FABRICATION
Determine Frame Size ..... Pages 5 & 6
Fabricate Vertical Members ..... Pages 7 & 8
Fabricate Horizontals ..... Pages 9 & 10
Fabricate Glass Stops ..... Page 11
Fabricate Sill Flashing ..... Pages 12 & 13
Fabricate Corner Covers ..... Page 13
Fabricate Head Receptors ..... Page 14

FRAME ASSEMBLY
Assemble Frame ..... Pages 15 to 18
Install Steel Reinforcing (Optional) ..... Page 19
Install Perimeter Fillers ..... Page 20
Install Foam Plugs at Head ..... Page 21
Install Weather Seal ..... Page 22

FRAME INSTALLATION
Install Sill Flashing End Dams ..... Pages 23 & 24
Install Sill Flashing ..... Page 25
Install Flashing Splice Sleeve ..... Pages 25 & 26
Install Slab Edge Covers ..... Pages 27 to 36
Sill Preparation ..... Pages 37 & 38
Install Frames ..... Pages 39 to 42
Apply Perimeter Sealant ..... Pages 43 to 45

GLAZING
Install Water Deflectors ..... Page 46
Install Exterior Glazing Gaskets ..... Pages 47 & 48
Install Setting / Side Blocks ..... Page 49
Install Glass ..... Page 50
Install Anti-Walk Blocks (Dry Glazing Only) ..... Page 51
Install Glass Stops ..... Page 52
Install Interior Spacers ..... Pages 53 to 55
Apply Sealant (Wet Glazing) ..... Page 56

FINALIZING INSTALLATION
Install Interior Covers ..... Page 57

Installation Notes

1. Do not drop, roll or drag boxes of aluminum framing. Move and stack boxes with proper support to prevent distortion. If fork lifts are used, be especially careful about striking the boxes when lifting or moving.

2. Store in a dry, out of the way area. If rain exposure, condensation or any water contact is likely, then all packaging material should be removed. Wet packaging materials will discolor and may stain aluminum finishes and paints.

3. All materials should be checked for quality and quantity upon receipt, YKK AP must be notified immediately of any discrepancies in shipment. Check to make sure that you have the required shims, sealants, supplies and tools necessary for the installation.

4. Carefully check the openings and surrounding conditions that will receive your material. Remember, if the construction is not per the construction documents, it is your responsibility to notify the general contractor in writing. Any discrepancies must be brought to the general contractor's attention before you proceed with the installation.

5. Gather your shop drawings, materials, packing list, and this installation manual. Carefully review parts location, the sequence it goes therein, when you glaze it and how you seal it. Installation instructions are of a general nature and may not cover every condition you will encounter. The shop drawings and/or installation manuals were prepared specifically for the product.

6. Any material substitutions must be of equal or greater quality.

7. Make certain that material samples have been sent for compatibility testing for all manufacturer's sealants involved. Make certain sealants have been installed in strict accordance with the manufacturer's recommendations and specifications.

8. Remember to isolate, in an approved manner, all aluminum from uncured masonry or other incompatible materials.

9. System-to-structure fasteners are not supplied by YKK AP. Fasteners called out on shop drawings are to indicate minimum sizes for design loading.

10. If any questions arise concerning YKK AP products or their installation, contact YKK AP for clarification before proceeding.

11. YKK AP storefront and/or curtain wall framing is typically completed before drywall, flooring and other products which may still be in process. Take the extra time to wrap and protect the work produced.

12. Cutting tolerances are plus zero, minus one thirty second unless otherwise noted.

13. Check our website, www.ykkap.com, for the latest installation manual update prior to commencing work.

FRAMING MEMBERS

	Male Mullion	**BE9-2723**	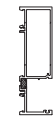	**Corner Mullion Half**	**BE9-2736**
	Female Mullion	**BE9-2724**		**90° Corner Cover** (Large)	**E9-2740**
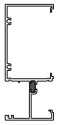	**Jamb** 2-1/2” x 6”	**BE9-2725**		**90° Corner Cover** (Small)	**E9-2741**
	Head 2-1/2” x 6”	**BE9-2726**	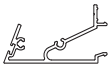	**135° Corner Cover** (Large)	**E9-2742**
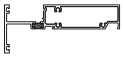	**Horizontal** 2-1/2” x 6”	**BE9-2727**		**135° Corner Cover** (Small)	**E9-2743**
	Sill 2-1/2” x 6”	**BE9-2728**		**Glass Stop**	**E9-2730**
	Sill Flashing	**BE9-2729**		**Receptor Snap Cover** Used with BE9-2739	**E9-8720**
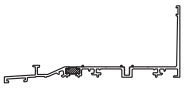	**Sill Flashing** For Slab Edge Cover	**BE9-2735**	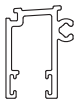	**Aluminum Plate Adaptor** For BE9-2735	**E9-8222**
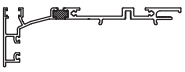	**Head Receptor**	**BE9-2739**		**Interior Cover**	**E9-2731**
	Flat Filler	**BE9-2734**		**Anchor** For Impact Glazing	**E9-2732**
	Heavy Duty Male Mullion	**BE9-2737**		**Receptor Anchor** For Impact Glazing at Slab Edge	**E9-2744**
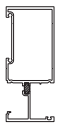	**Heavy Duty Jamb Mullion**	**BE9-2738**		**Strap Anchor**	**E9-2733**

FRAMING MEMBERS

	Flush FIller For Sill	**E9-2293**		**8” Slab Edge Cover** For Use with 7” Slab	**E9-8589**
	6-1/8” Slab Edge Cover For Use with 5-1/8” Slab	**E9-8059**		**9” Slab Edge Cover** For Use with 8” Slab	**E9-8428**
	6-5/8” Slab Edge Cover For Use with 5-5/8” Slab	**E9-7723**	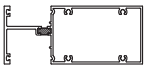	**Mullion /** **Door Transom Bar**	**BE9-2745**
	7-3/8” Slab Edge Cover For Use with 6-3/8” Slab	**E9-8223**	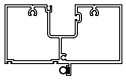	**5” x 2-1/2” Door Head O/P**	**AS-0501**
	7-7/8” Slab Edge Cover For Use with 7-7/8” Slab	**E9-8231**		**Door Jamb Subframe**	**AS-3180**

ACCESSORIES

	Anchor 10” Cut Length, for Non-Impact Glazing	**E1-1190**	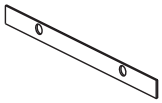	**End Cap** For E9-8231 Slab Edge Cover Plate	**E1-9954**
	Head Receptor Anchor 18” Cut Length, For Non-Impact Glazing at Slab Edge	**E1-1193**	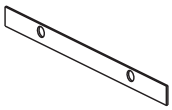	**End Cap** For E9-8589 Slab Edge Cover Plate	**E1-9955**
	Jamb Strap Anchor 10” Cut Length, used with BE9-2738	**E1-1191**	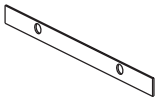	**End Cap** For E9-8428 Slab Edge Cover Plate	**E1-9956**
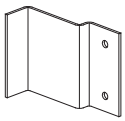	**Jamb Strap Anchor** 4” Cut Length, used with BE9-2725	**E1-1192**	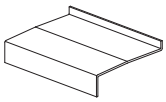	**Splice Sleeve** For Sill Flashing at Slab Edge	**E1-9959**
	Door Jamb Mullion Anchor (1-7/8”)	**E1-1195**	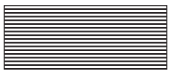	**Silicone Splice Sleeve**	**E2-0070**
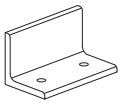	**Door Jamb Anchor (3-5/8”)**	**E1-1199**		**Flat Filler** PVC	**E3-0023**
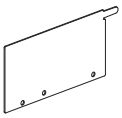	**End Dam** For Sill Flashing	**E1-1198**		**PVC Perimeter Filler**	**E3-3664**
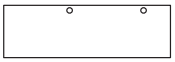	**End Cap** For Head Receptor	**E1-1197**		**Head Receptor Gasket**	**E2-0097**
	End Cap For Slab Edge Sill Flashing Adaptor	**E1-1196**		**Airtight Gasket**	**E2-0051**
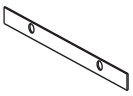	**End Cap** For E9-8059 Slab Edge Cover Plate	**E1-9984**		**Weather Seal Gasket**	**E2-7010**
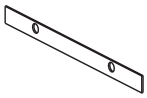	**End Cap** For E9-7723 Slab Edge Cover Plate	**E1-9985**		**Anti-Walk Block** For Male Mullion	**E2-0153**
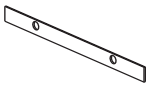	**End Cap** For E9-8223 Slab Edge Cover Plate	**E1-9953**		**Anti-Walk Block** For Jamb	**E2-0519**

ACCESSORIES

	Side Block	**E2-0096**		**Dart Gasket** For Large Missile Wet Glazing	**E2-9801**
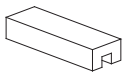	**Setting Block**	**E2-0095**		**Isolator Tape**	**E2-0256**
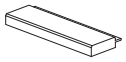	**Setting Block**	**E2-0168**		**Weep Baffle**	**E2-0099**
	Water Deflector	**E2-0049**	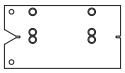	**Drill Fixture**	**H-7265**
	Push-in Spacer 1/4” F.C.	**E2-0359**		**#10” x 3/8” PHMS** Stainless Steel, For Corner Cover Attachment	**PM-1006 -SS**
	Foam Backer Tape 1” x 1-1/4” (Roll)	**E2-0259**		**1/4” x 1/2” PHMS** Stainless Steel, For Anchoring Sill to Sill Flashing	**PM-2508 -SS**
	1/4” x 1/4” Spacer Tape	**E2-0110**		**#12 x 3/4” UFHSMS Type A**, Zinc Plated Steel, For End Dam Attachment	**UA-1212**
	Exterior Dart Gasket for 1-1/4” GL.	**E2-0139**		**#12 x 1” FHSMS Type AB**, Used with E1-1192 Strap Anchor	**FC-1216**
	Exterior Dart Gasket for 1-3/16” GL.	**E2-0128**		**#12 x 5/8” PHSMS Type AB**, Zinc Plated Steel	**PC-1210**
	Dart Gasket 1/4” F.C.	**E2-0801**		**#12 x 1-1/4” PHSMS Type AB**, Zinc Plated Steel	**PC-1220**
	Wedge Gasket 1/4” F.C.	**E2-0802**		**#12 x 1-1/2” PHSMS Type AB**, Zinc Plated Steel	**PC-1224**

FRAME FABRICATION

STEP 1
DETERMINE FRAME SIZE

Determine Frame Width:

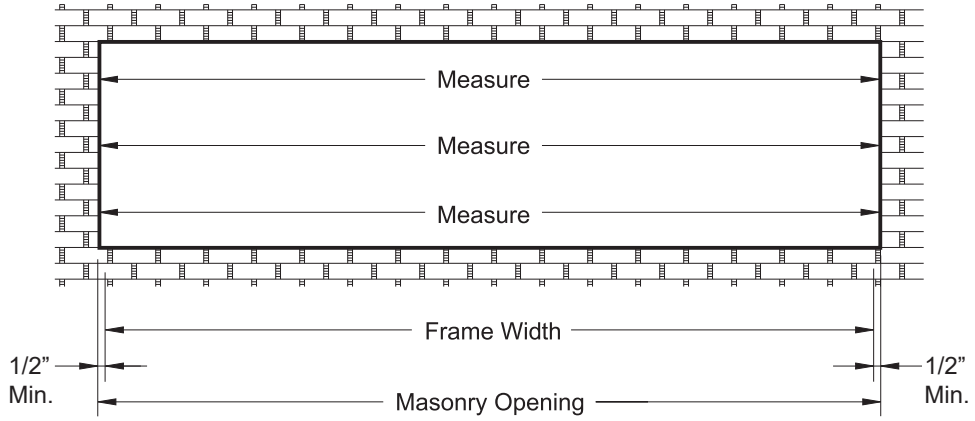

Note: Check opening for squareness of plumb at both ends, units must be installed in a true rectangle.

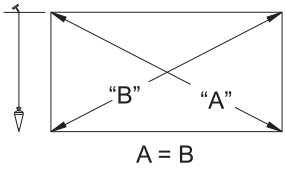

DETAIL 1

-Measure the width of the masonry opening at the top, middle, and bottom.
-Select the smallest dimension measured and subtract 1” to determine the frame width.
See **Detail 1**.

Note: For additional possibilities such as slab edge cover application, it is recommended to increase the caulk joint at the jambs to facilitate installation of the last framed unit. (Unit width will proportionally affect caulk joint width.)

Determine Frame Height:

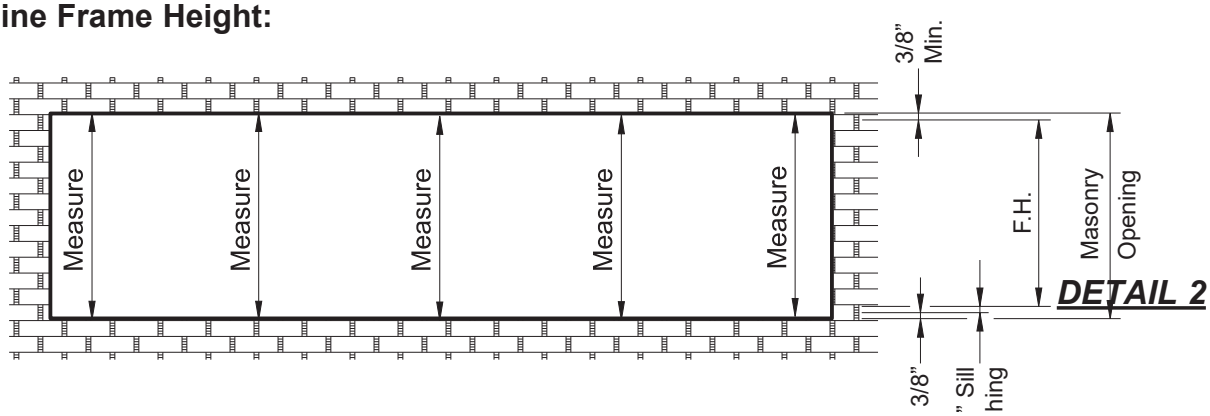

DETAIL 2

-Measure the height of the masonry opening several times along the entire length of opening.
-Select the smallest dimension measured and subtract 1-1/4” to determine the frame height to be used.

Minimum of 3/8” shim/caulk joint at the head.
1/2” for the sill flashing.
Minimum 3/8” shim/caulk joint below the sill flashing.

See **Detail 2**.

FRAME FABRICATION

STEP 1 (Continued)
DETERMINE FRAME SIZE

Determine Frame Height for Slab Edge Conditions:

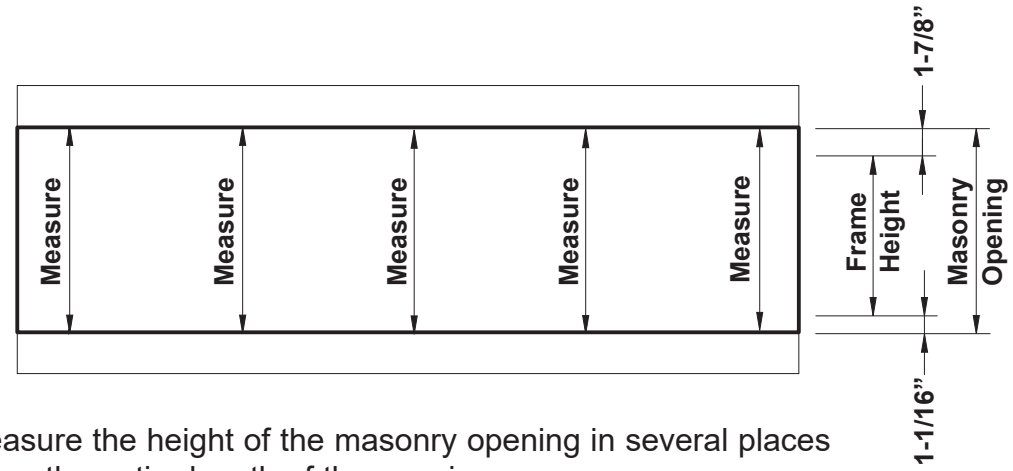

-Measure the height of the masonry opening in several places along the entire length of the opening.
-Select the smallest dimension measured and subtract 2-15/16” to determine the frame height to be used:
  -5/8” for the shim/caulk joint at the head.
  -1-1/4” for the head receptor.
  -7/16” for the sill flashing.
  -5/8” for the shim/caulk joint below the sill flashing.

See **Detail 3**.

Detail 3

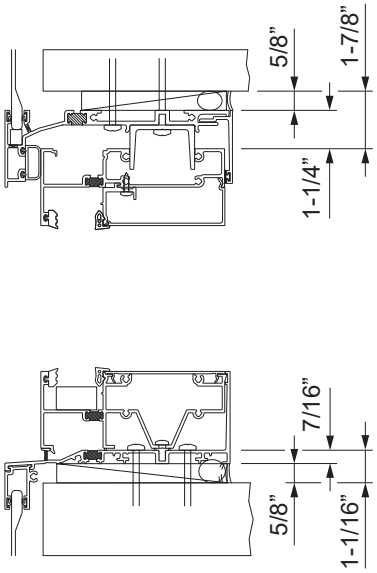

FRAME FABRICATION

STEP 2
FABRICATE VERTICAL MEMBERS

-Cut all jamb and two piece vertical members to the frame height determined in **Step 1**.

-Fabricate holes in the vertical members for screw spline attachment using one of the methods below:
-Using short pieces of horizontal members as a template, line up the glazing pockets and mark hole locations through the screw splines of the templates.

OR

-Layout hole locations on vertical members as shown in **Detail 4**.

-Drill 0.238” diameter (#B drill bit) holes at each location marked.

Note: Additional fabrication will be required for the inclusion of steel reinforcing.

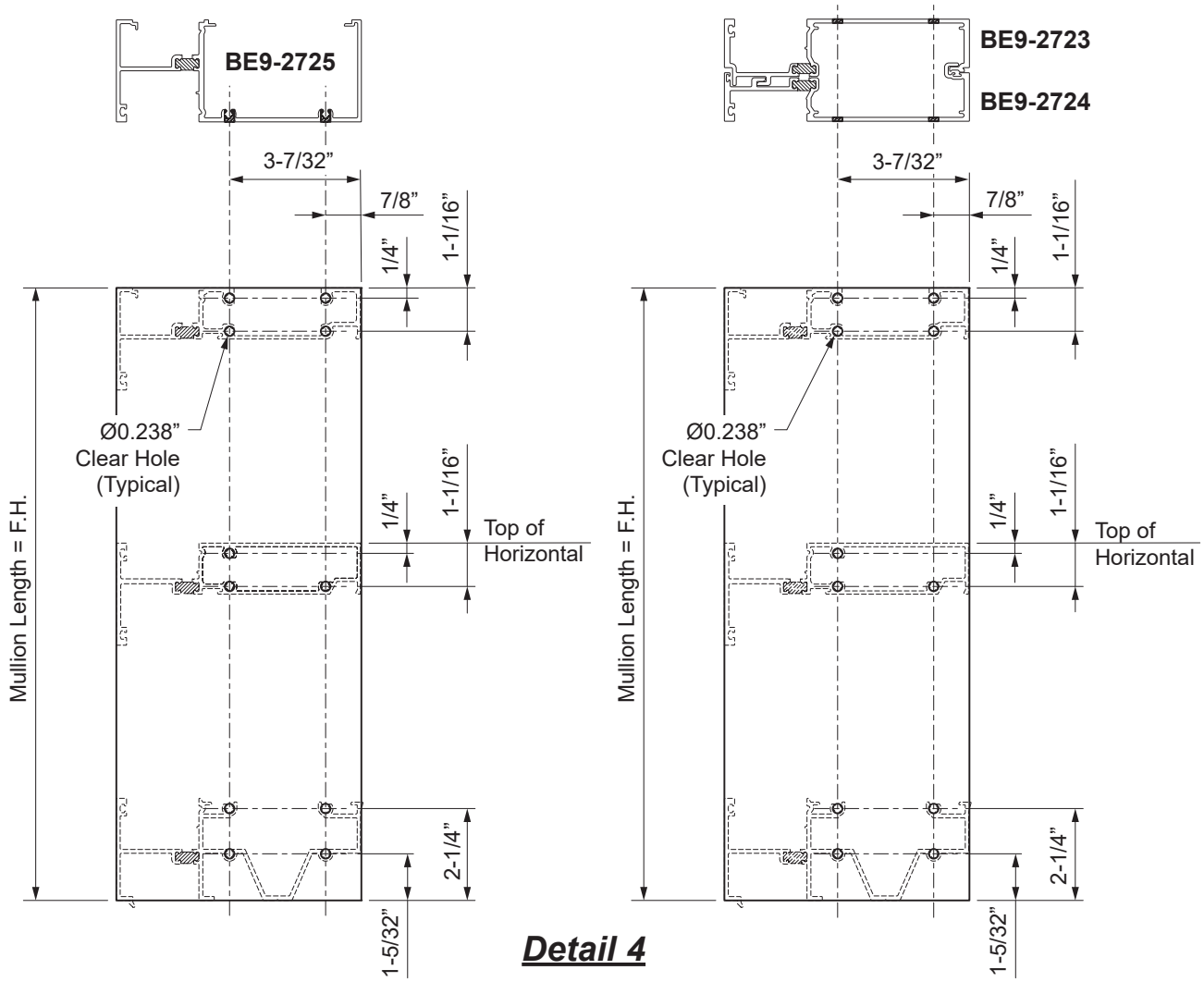

Detail 4

FRAME FABRICATION

STEP 2 (Continued)
FABRICATE VERTICAL MEMBERS

-For hollow, heavy duty vertical members, fabricate access holes in addition to the clear holes according to the methods previously shown and in **Detail 5**.

Note: Additional fabrication will be required for the inclusion of steel reinforcing.

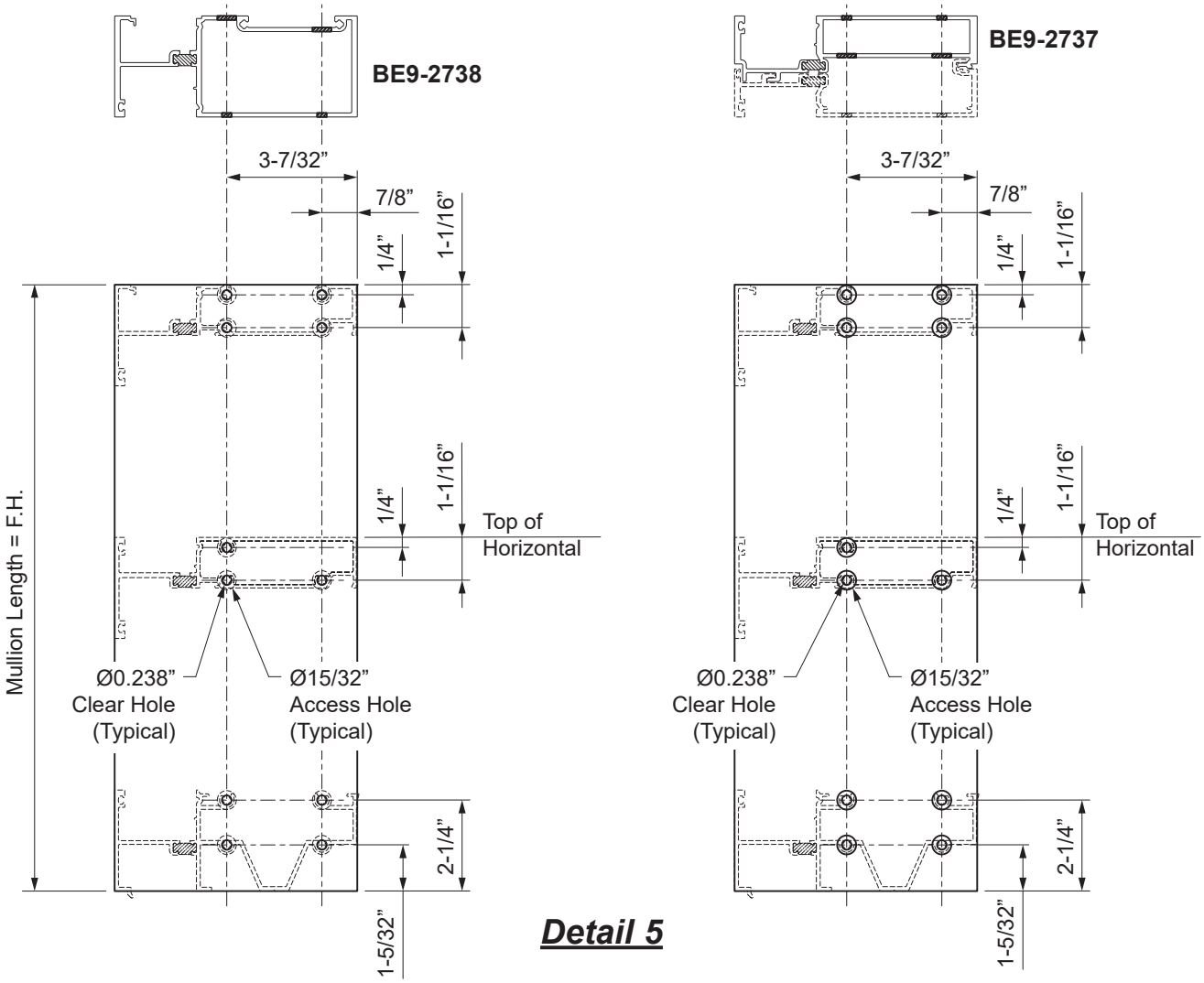

Detail 5

FRAME FABRICATION

STEP 3
FABRICATE HORIZONTALS

-Cut all head members, immediate horizontals, and sill members to the horizontal daylight opening.
-Head and intermediate horizontal members will require 0.189” diameter tap holes for the glass stops, at 3” from the ends, as shown in **Detail 6**.
-Sill members will require additional 0.281” diameter clear holes at 1-1/2” and 3” from the ends, centered along the v-groove as shown in **Detail 6**.

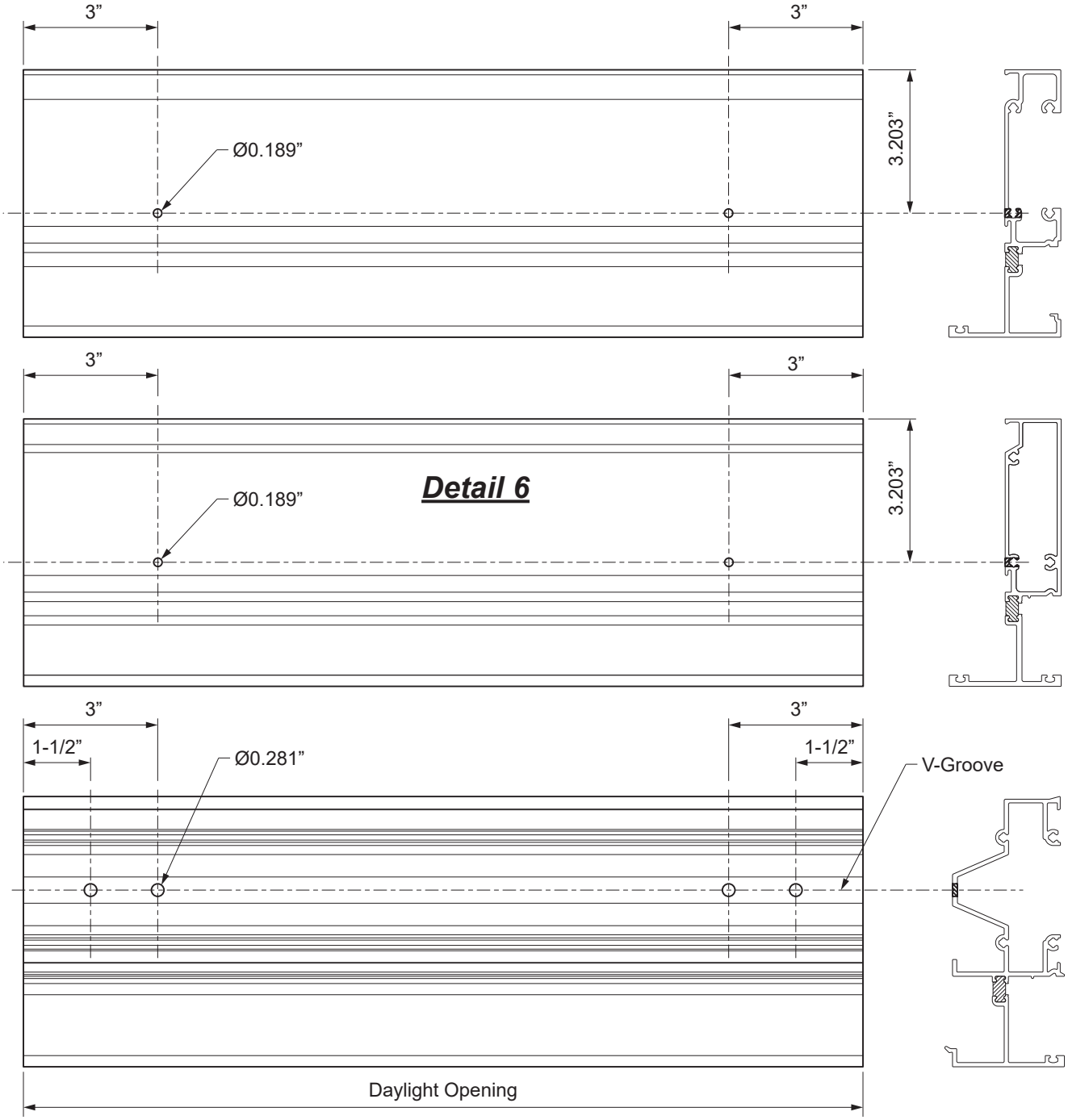

FRAME FABRICATION

STEP 3 (Continued)
FABRICATE HORIZONTALS

When the head is anchored to the substrate with the E1-1190 anchor, access holes will need to be drilled into the head member.

-Temporarily clamp the E1-1190 anchor onto the head where it will be in relation to the head member once anchored to the substrate.
-Drill 5/16” diameter holes into the head in line with the holes in the anchor. Unclamp the anchor. Then drill the access holes out to 3/4” diameter.

Note: This is in addition to the 0.189” diameter tap holes for the glass stop. Refer to FPA drawings or shop drawings for approprate fastener and hole locations as determined by a qualified engineer or contact YKK AP.

See **Detail 7**.

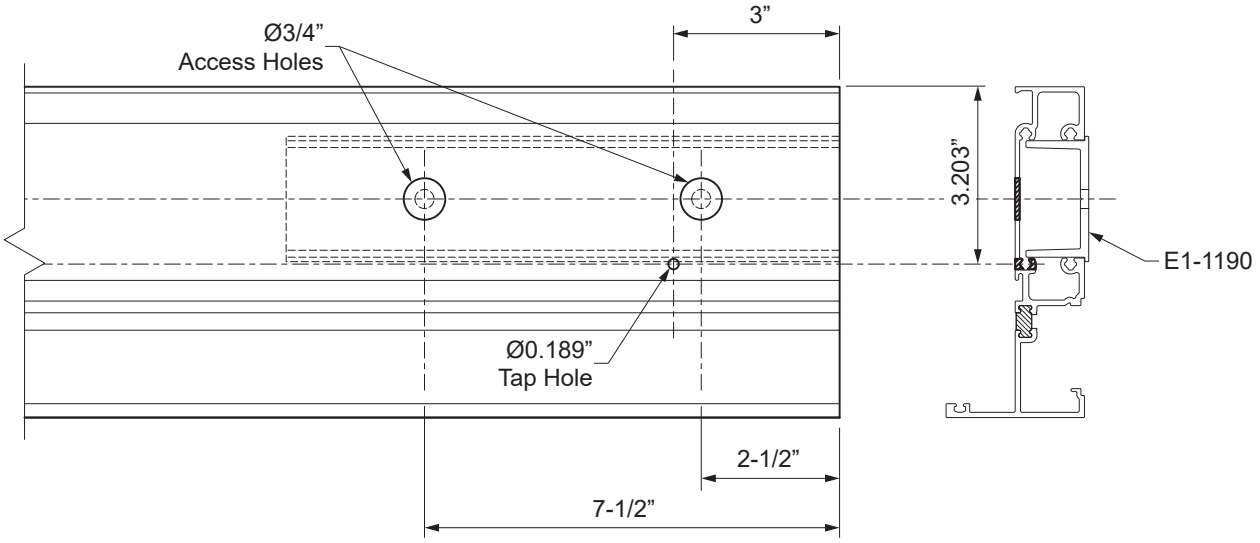

Detail 7

FRAME FABRICATION

STEP 4
FABRICATE FILLERS & GLASS STOPS

-Cut all vertical perimeter flush or flat fillers to the length of the jambs, except where strap anchors would interfere with the jamb filler.
-Cut all horizontal flush fillers, flat fillers, and E9-2731 interior covers to horizontal daylight opening minus(-) 1/32”.

See **Detail 8**.

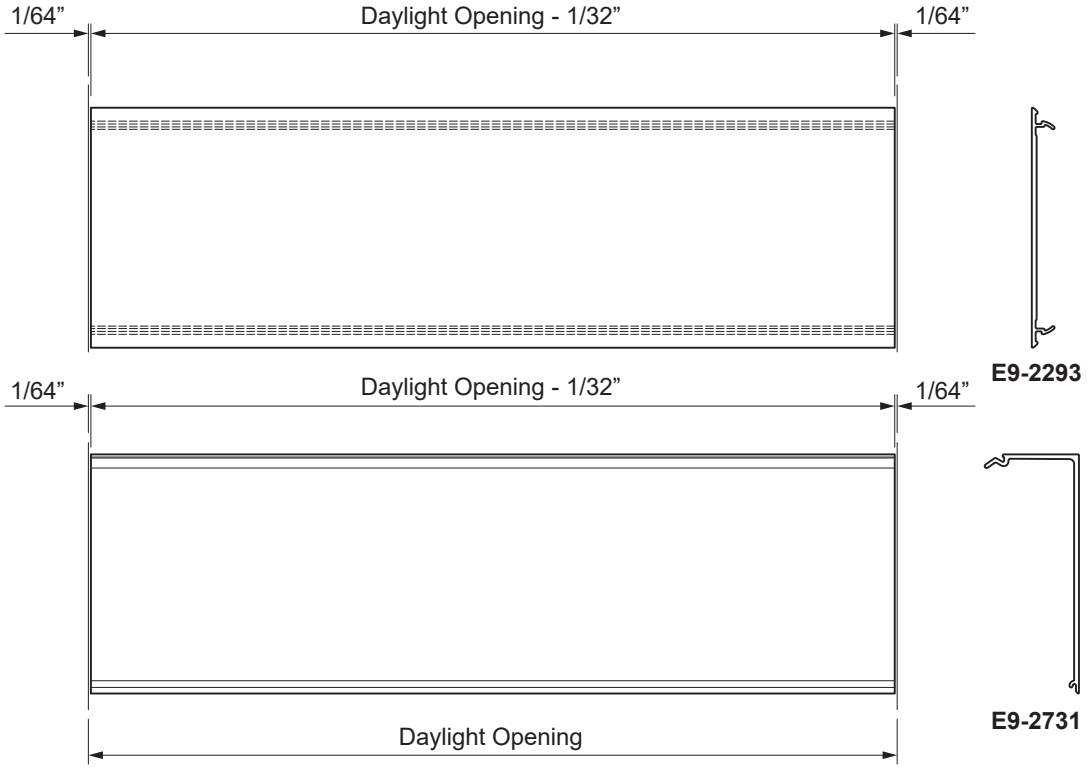

Detail 8

-Cut E9-2730 glass stops to horizontal daylight opening minus(-) 1/8”. Drill two 0.236” diameter clear holes along the v-groove in the glass stop as shown in **Detail 9**.
-Add a third hole at centerline for glass stops over 48” in length.

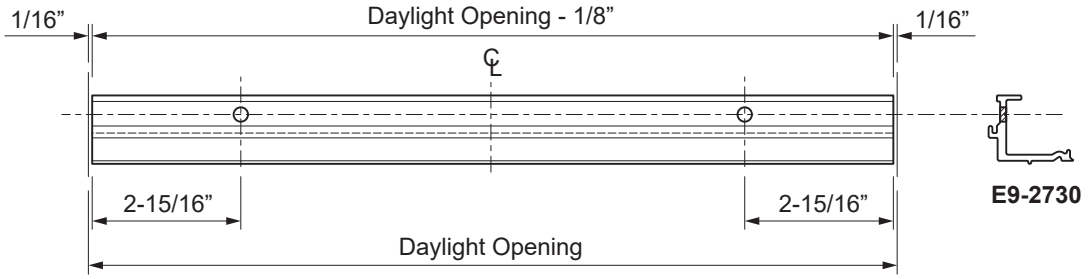

Detail 9

FRAME FABRICATION

STEP 4
FABRICATE SILL FLASHING

-Cut the sill flashing to the Frame Width plus(+) 5/16” at each jamb.
-For frame openings longer than 24’-0”, allow for a 3/8” splice joint between sill flashing members every twelve to fifteen feet at the center of a daylight opening (best location next to the door jamb).
-Mark the front face of the sill flashing at the center of each vertical location and the midpoint of the daylight opening between the verticals.
-Drill a 5/16” diameter weep hole in the face of the sill flashing at each location marked.

See **Detail 10**.

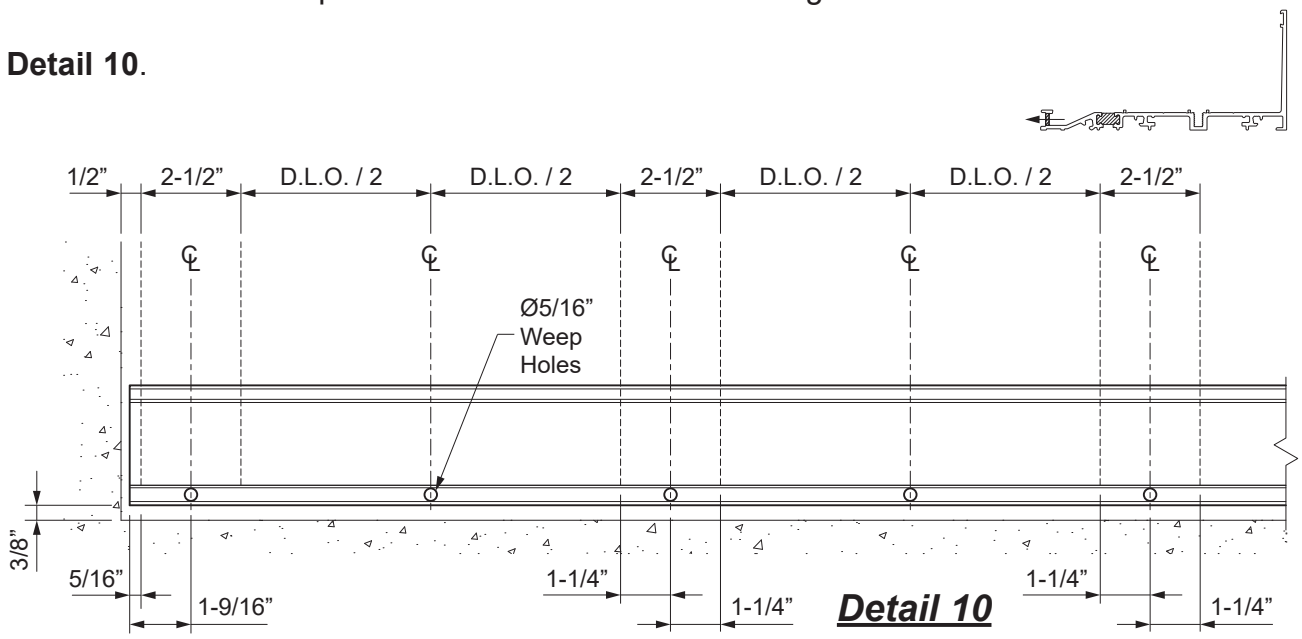

Detail 10

Additional fabrication will be required for BE9-2735 sill flashings used at slab edge covers if splices are needed.
-Notch the sill flashing as shown in **Detail 11**.

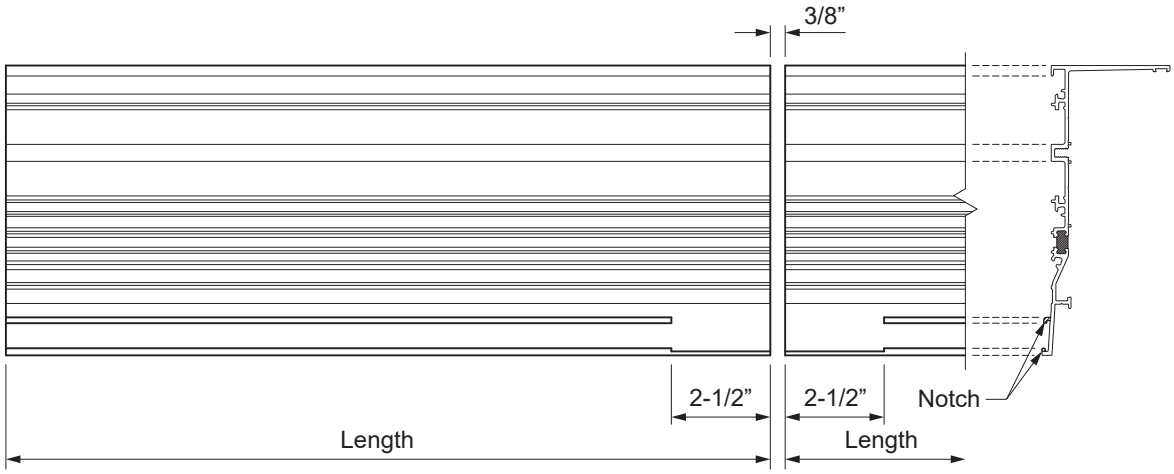

Detail 11

FRAME FABRICATION

STEP 5A
FABRICATE SLAB EDGE PLATE ADAPTOR

-Cut the aluminum plate adaptor E9-8222 to the same length as the sill fashing.
-Notch the aluminum plate adaptor 2-1/2” from each end at each splice joint location as shown in **Detail 12**.
-Cut slab edge cover plates to length as indicated on the approved shop drawings

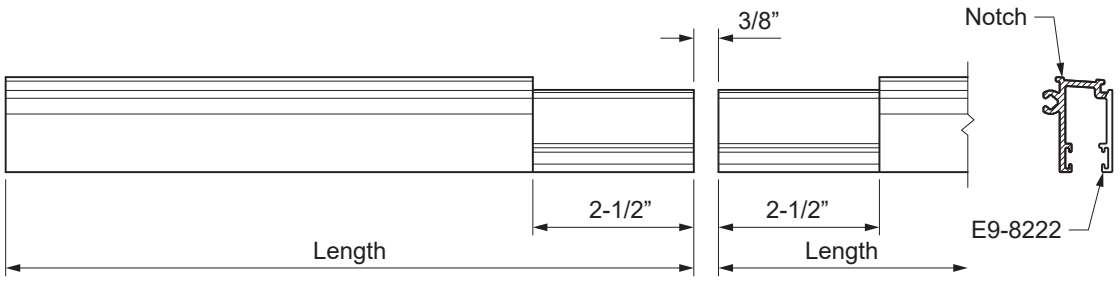

Detail 12

STEP 6
FABRICATE CORNER COVERS

-Cut the corner cover components to the mullion length. Drill 0.213” diameter holes into the cover at the v-groove where the cover will be fastened to the mullion at 3” from each end and at 24” maximum on center.

See **Detail 13**.

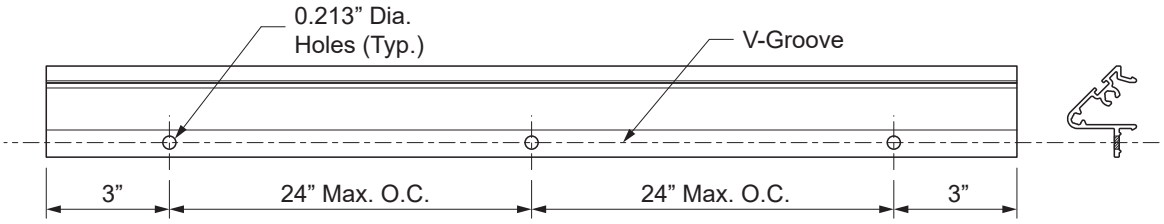

Detail 13
E9-2741 Shown,
Others Similar

FRAME FABRICATION

STEP 7
FABRICATE HEAD RECEPTOR

-Cut the head receptor to the Frame Width plus(+) 5/16” at each jamb.
-For frame openings longer than 24’-0”, allow for a 3/8” splice joint between sill flashing members every twelve to fifteen feet at the center of a D.L.O.
-Mark the front face of the head receptor at the center of each vertical location and the midpoint of the daylight opening between the verticals.
-Drill a 1/4” diameter weep holes in the head receptor at each location marked.
-Drill clear holes for anchor fasteners into the head receptor as indicated on the approved shop drawings and or P.E. calculations.

See **Detail 14**.

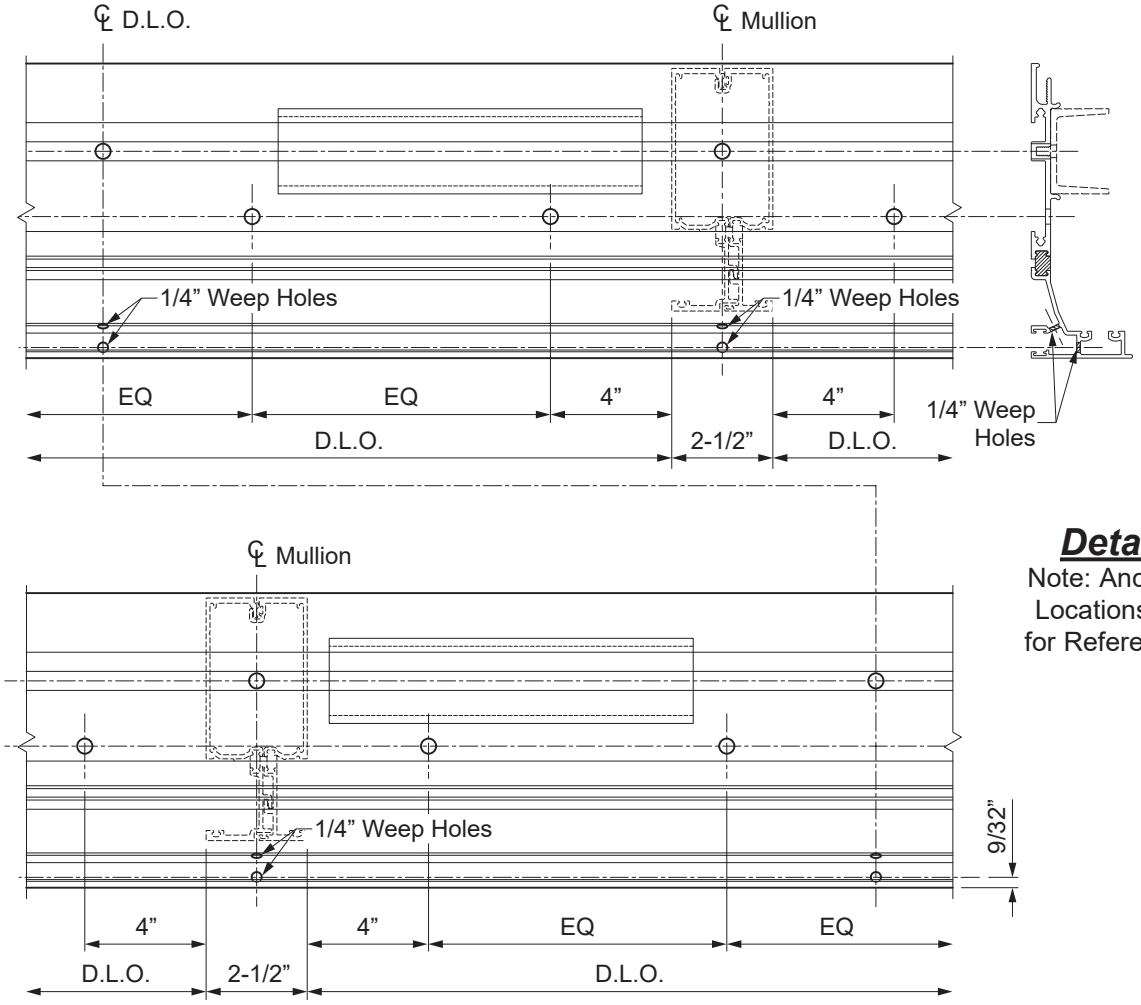

Detail 14
Note: Anchor Hole Locations Shown for Reference Only

FRAME ASSEMBLY

STEP 8
ASSEMBLE FRAME

Note: It is recommended to lay out the unit pieces face down on a table or saw horses during assembly, fully supporting the mullions. If using saw horses, a brace tying the two together will be required.

-If strap anchors are used at the head, insert them into the head member prior to assembly (2 per Daylight Opening, unless otherwise noted).
-Apply sealant to the end of the horizontals members to be attached to the first mullion or jamb, at the shaded areas of the head and intermediate horizontals and the entire end of the sill.

See **Detail 16**.

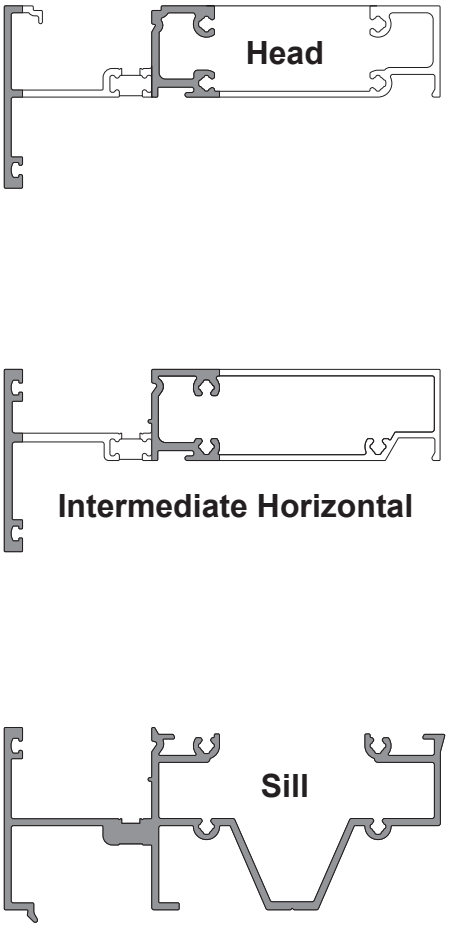

Detail 15

FRAME ASSEMBLY

STEP 8 (Continued)
ASSEMBLE FRAME

-Attach the horizontal members to the first mullion or jamb using PC-1220 screws.

Note: For attachment to BE9-2725 jamb, use PC-1224 screws.

See **Detail 16.**

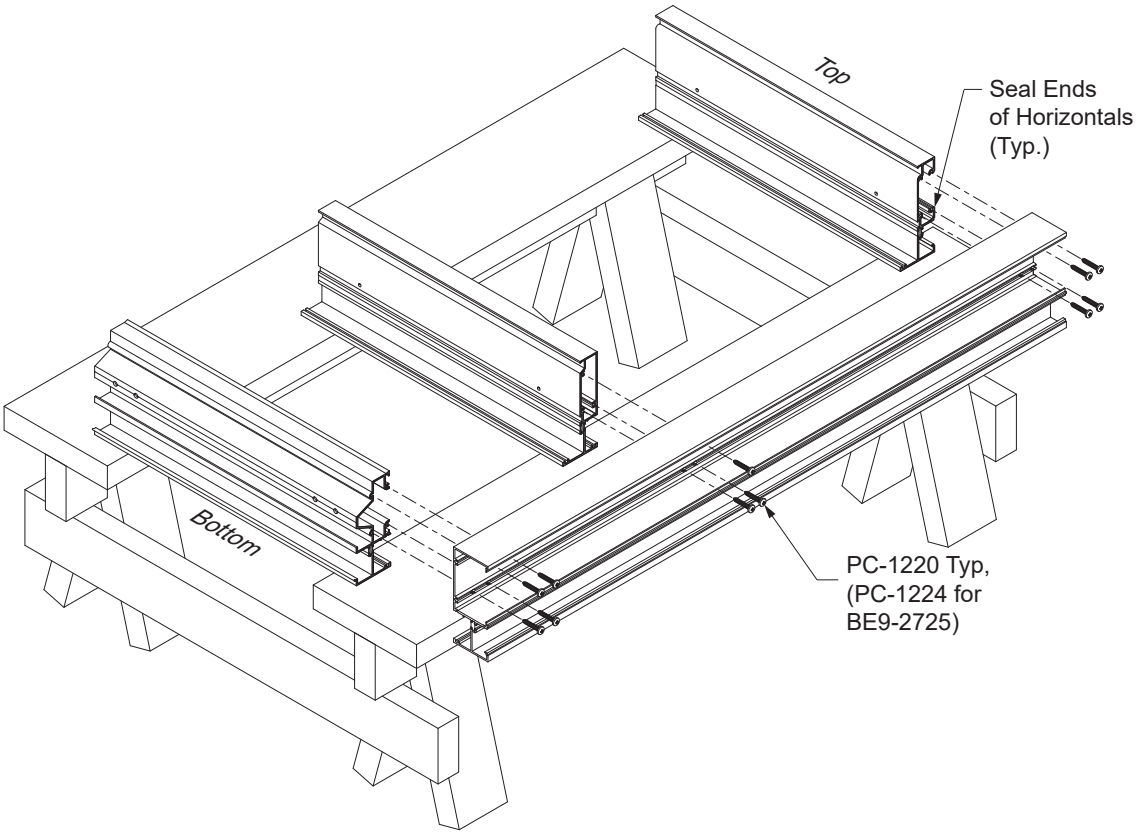

Detail 16
Jamb Mullion shown,
Female Mullion Similar

FRAME ASSEMBLY

STEP 8 (Continued)
ASSEMBLE FRAME

-Apply sealant to the end of the head, horizontals, and sill that is to be attached to the second mullion or jamb as previously shown in **Detail 16**.
-Attach the horizontal members to the mullion or jamb using PC-1220 screws. See **Detail 17**.
-Apply sealant to the inside of the glazing pocket of the horizontal at the verticals as shown in **Detail 17A**.

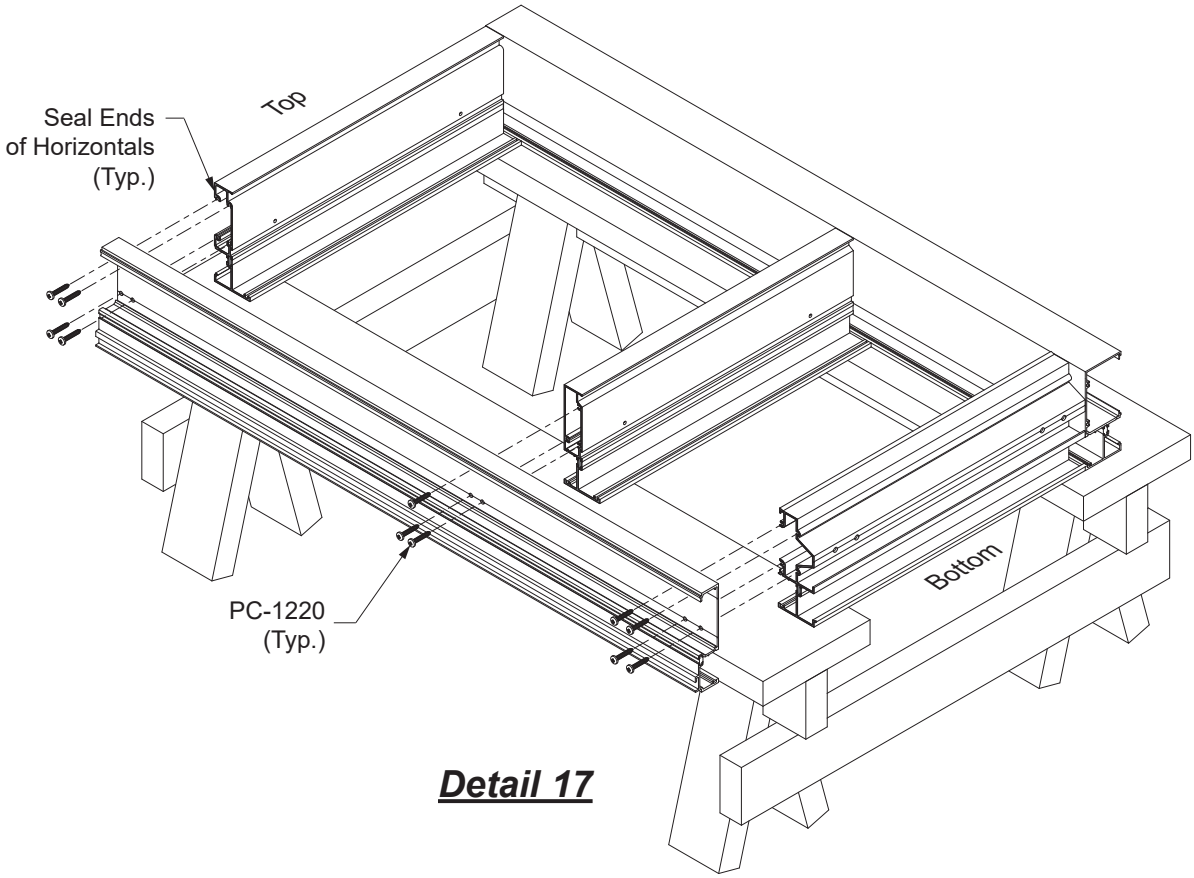

Detail 17

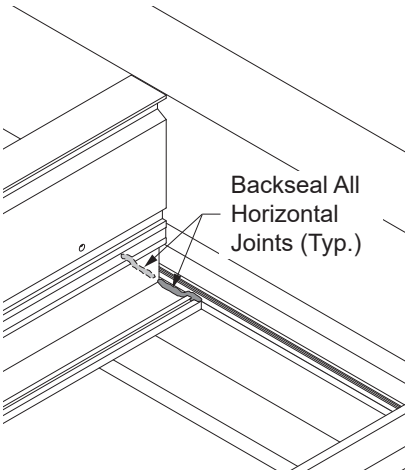

Detail 17A

FRAME ASSEMBLY

STEP 8 (Continued)
ASSEMBLE FRAME -- CORNER MULLION

-Apply sealant to the interior snap interface of the interior corner cover, 6” up from the bottom of the mullion. Snap the cover pieces onto the corner mullion half. Fasten with PM-1006-SS fasteners at the holes previously drilled in fabrication.
-The exterior corner cover will require E2-0051 bulb gaskets cut to the length of the mullion. Apply dabs of sealant to the bottom of the bulb gasket to adhere it to the mullion so that it will not slide out during unit installation. Do not overseal. Insert the gasket into the reglet at the cover.
-The 90° corner cover (E9-2740) will also require an E2-0110 spacer tape adhered the cover for one side of the corner. This will keep the cover from flexing too much. (The other corner half for the adjoining unit will not need this spacer tape as well.)

See **Detail 18.**

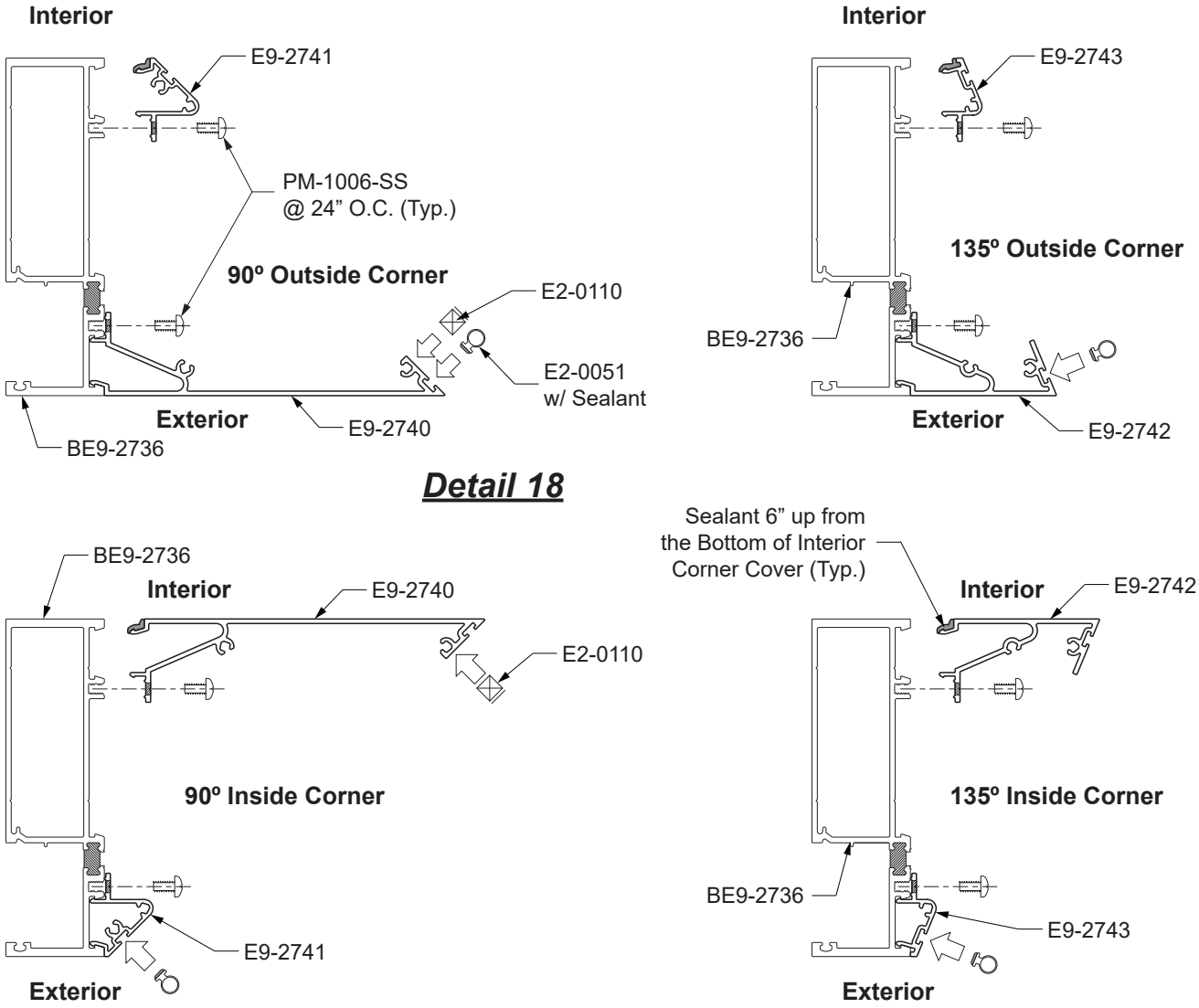

Detail 18

FRAME ASSEMBLY

STEP 9 (Optional)
INSTALL STEEL REINFORCING

-Install steel reinforcing into the mullions and jambs as reqiured by the P.E. calculations and or approved shop drawings.
-Steel reinforcing may be installed at the head, sill, and horizontals with fasteners, taking care that the fasteners do not interfere with the horizontals nor would be visible when the unit is installed.

See **Detail 19**.

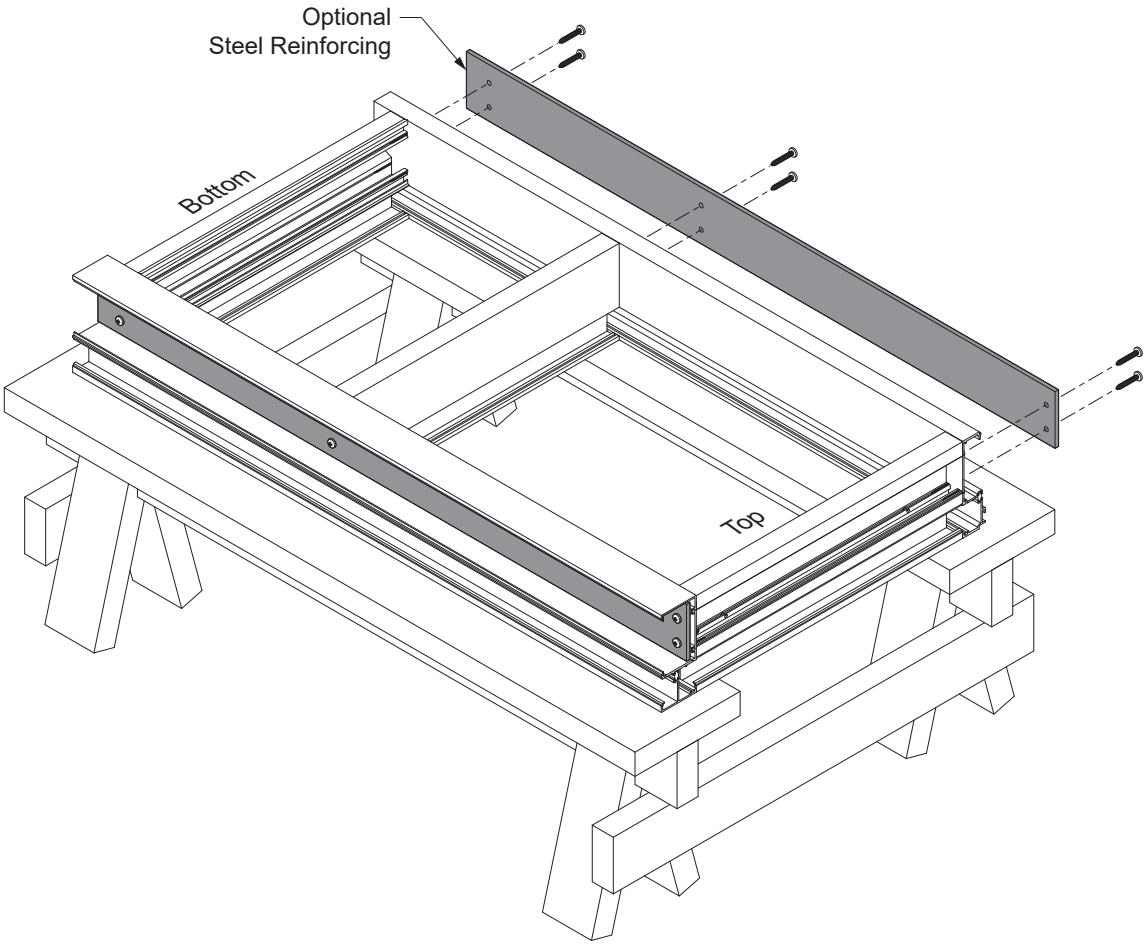

Detail 19

FRAME ASSEMBLY

STEP 10
INSTALL PERIMETER FILLERS

Install perimeter fillers into the jamb mullions and the head member.
-For the head, cut the E3-3664 pocket filler to horizontal daylight opening minus(-) 1/32” and snap it into the perimeter glazing pocket.

-If jamb strap anchors are used, install them into the jambs prior to installing perimeter fillers.
See **Detail 20**.

-At the jamb, cut the E3-3664 pocket filler to length of vertical and install it into the jamb.
-Cut the E3-0023 to the length of the jamb, except where strap anchors would interfere. Snap the filler into place.

See **Detail 21**.

Note: E3-0023 is not required for heavy duty jamb mullion.

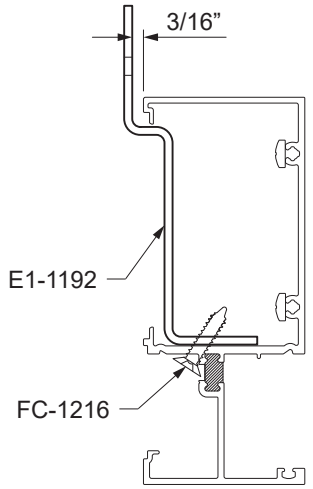

Detail 20

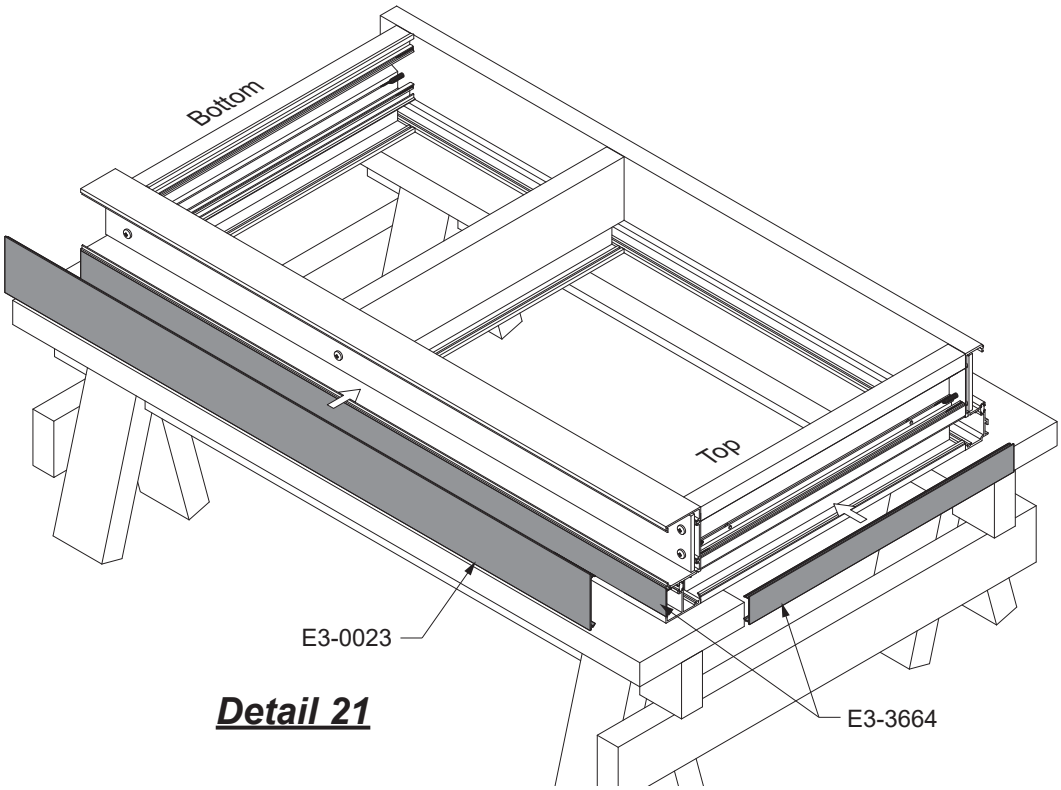

Detail 21

FRAME ASSEMBLY

STEP 11
INSTALL FOAM PLUGS AT HEAD

-Cut E2-0259 foam plugs to be installed at the head only. These will act as end caps for perimeter backer rods and sealant.
-Peel the adhesive tape from the foam and adhere it the mullion as shown in **Detail 22**. The foam can be easily compressed around physical obstacles in the assembled verticals.
-In the case where steel reinforcing is present at the head, the foam plugs may be adhered to the steel.

Note: For best adhesion, make sure the contact surfaces of the verticals and or steel members are are clean and dry. Do not allow the plugs to interfere with the mullion engagement areas.

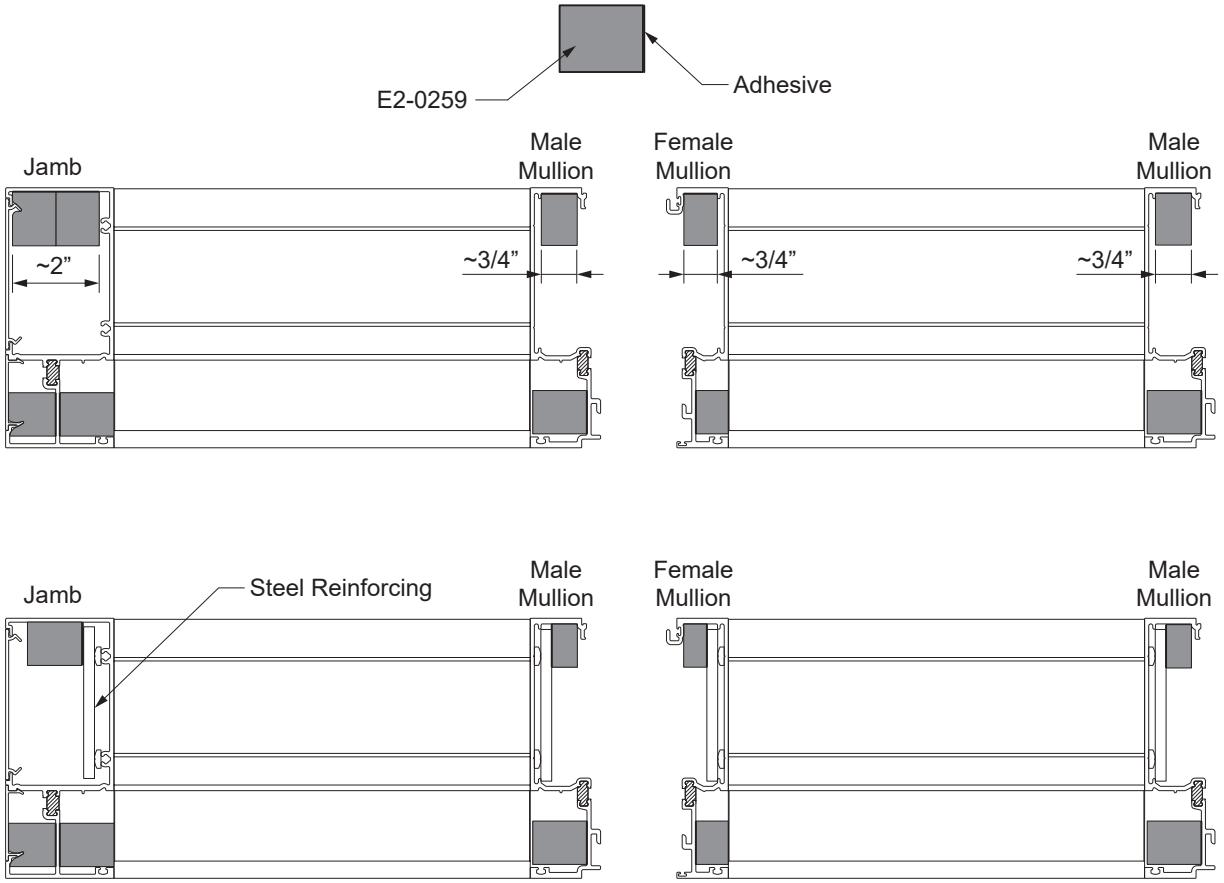

Detail 22

FRAME ASSEMBLY

STEP 12
INSTALL WEATHER SEAL

Weather seal gaskets (E2-7010) are installed in the female mullion only.

-Cut the weather seal gasket to length of the vertical, and install into the reglets of the female mullion in the proper orientation as shown in **Detail 23**.
-Apply dabs of sealant to the bottom of the weather seal gasket to adhere it to the mullion so that it will not slide out during unit installation. Do not overseal. Too much silicone will deter mullion engagement.

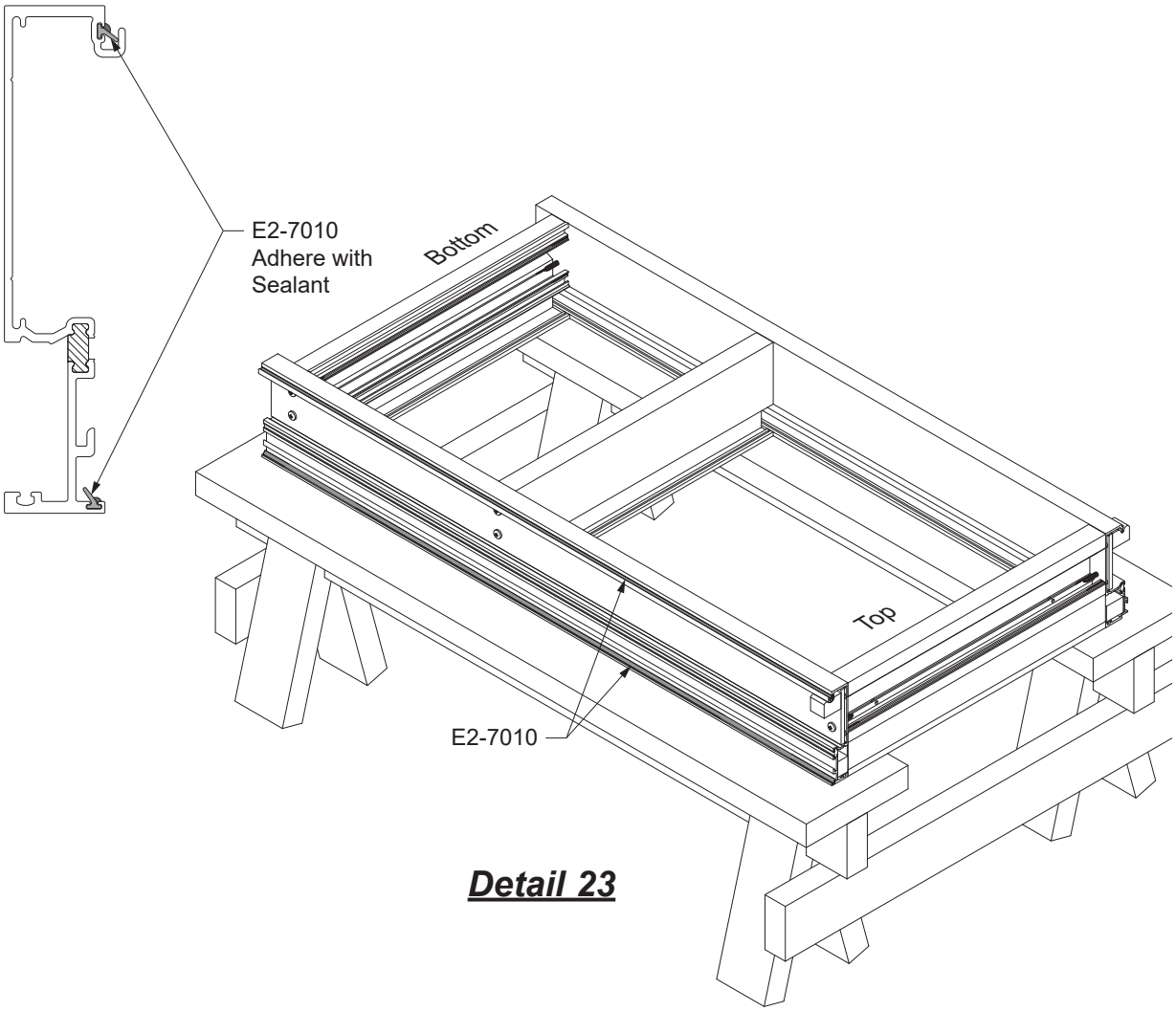

Detail 23

FRAME INSTALLATION

STEP 13
INSTALL SILL FLASHING END DAMS

-Bend the end dam tab left or right 90 degrees in order to “hand” the end dam for the left or right end of the flashing.

See **Detail 24.**

-Clean all joint surfaces using cleaner approved by sealant manufacturer.
-Apply sealant to the end of the sill flashing as shown in **Detail 25.**
-Slide the tab into the top portion of the sill flashing.
-Tap the tab into place with a small tool until the end dam is snug against the end of the flashing.
-Fasten the end dam to the sill flashing with three UA-1212 screws, starting at the back, followed by the front as shown in **Detail 25.**
-Tool sealant along the joint between the end dam and the sill flashing as shown in **Detail 26.**

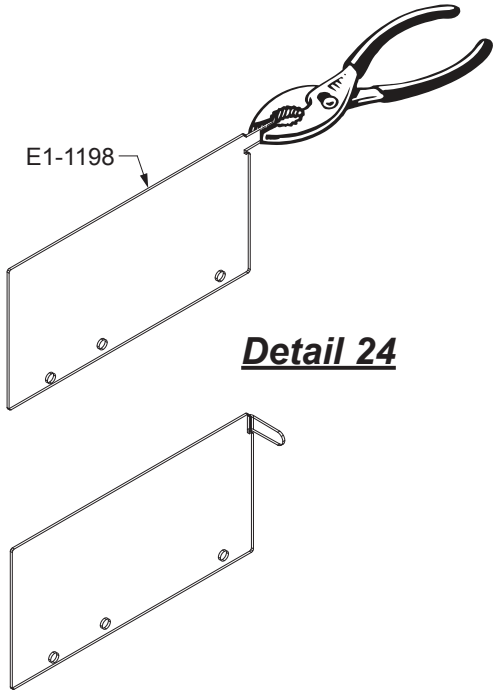

Detail 24

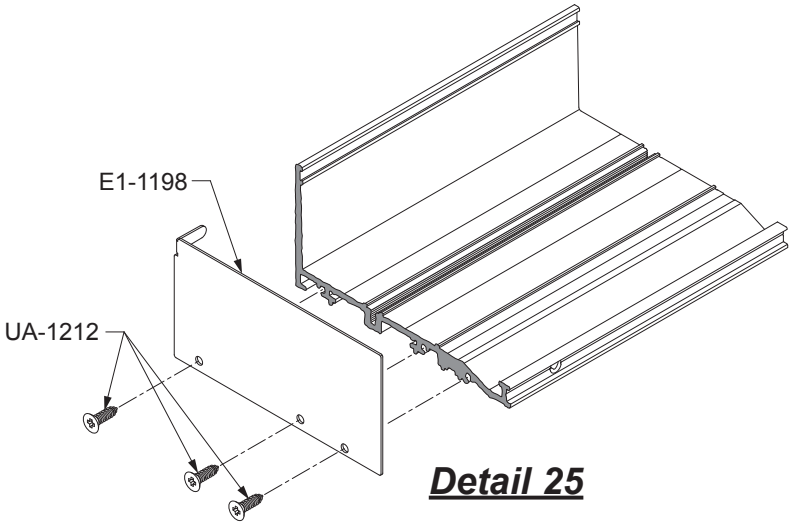

Detail 25

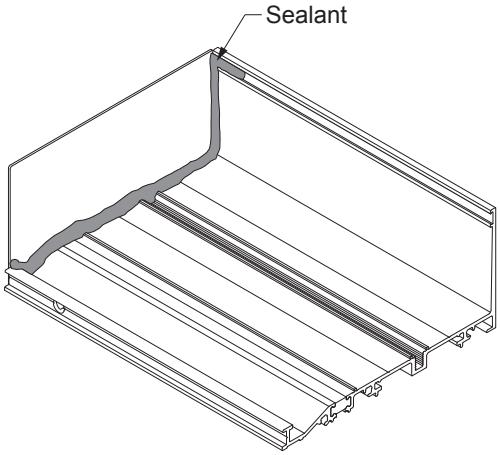

Detail 26

FRAME INSTALLATION

STEP 13A
INSTALL SILL FLASHING END DAMS FOR SLAB EDGE COVER

-Sill flashings with slab edge covers will require an aluminum plate adaptor E9-8222 to be attached prior to field installation.
-Insert (2) E2-0065 weathering gaskets cut to the length of the reglets on the adaptor.
-Slide the slab edge adaptor onto the sill flashing.

See **Detail 27**.

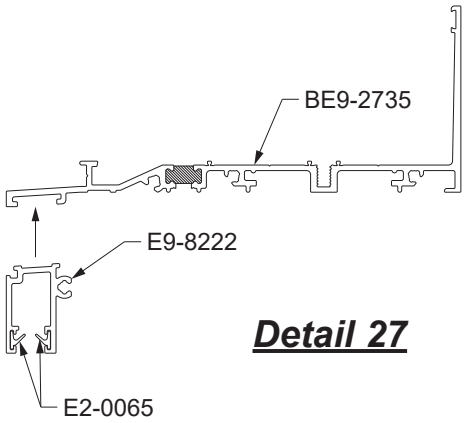

Detail 27

-Installation of the E1-1198 end dam is the same as illustrated in the previous page, except that the end of the installed slab edge adaptor will also require sealant.
-Fasten an E1-1196 end cap onto the slab edge assembly using an additional UA-1212 screw.

See **Detail 28**.

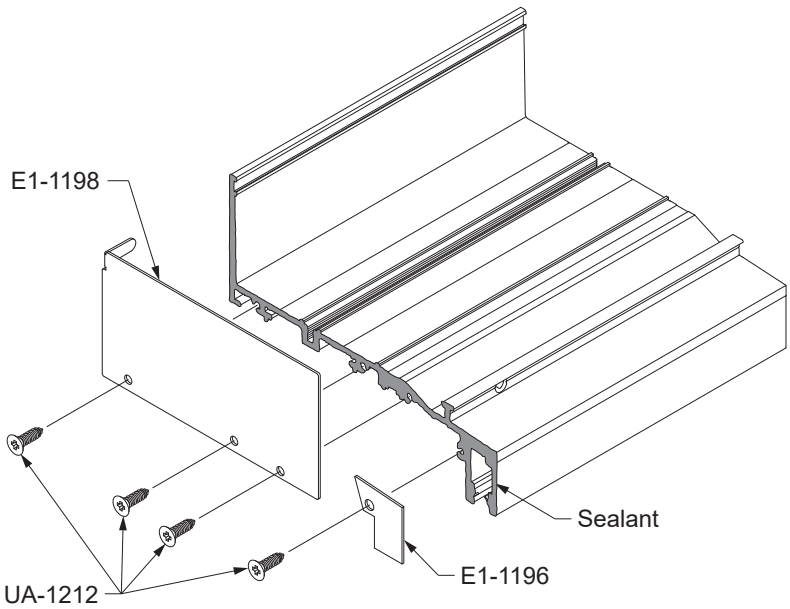

Detail 28

GLAZING

STEP 14
INSTALL SILL FLASHING

-Prior to installing the sill flashing, slide in E1-1191 strap anchors (2 per DLO) if they are being used.
-Install the sill flashing with a minimum of 3/8” shim space underneath. Sill flashing must be installed level.
-Anchor the sill flashing to the structure a maximum of 4” from each end and then 18” to 24” on center, per P.E. calculations, or per FPA drawings.
-Apply and tool sealant to cover the heads of all anchors and screws.

STEP 15
INSTALL SILL FLASHING SPLICE SLEEVE

-Remove the nub with a chisel or pliers on both sides of the splice joint 1-1/2” as shown in **Detail 29**.
-After the sill flashing has been shimmed and anchored to the building structure, insert a small backer rod under the sill flashing as shown in **Detail 30**.
-Position the Silicone Splice Sleeve against the back wall below the groove.
-Bend the Silicone Splice Sleeve into the front on the channel as shown. Mark and cut the sleeve at this position.
-Clean Sill Flashing and Silicone Splice Sleeve with isopropyl alcohol at the splice location.
-Seal the flashing at the splice location as shown in **Detail 30**, before positioning the flashing. Set the Silicone Splice Sleeve into the sealant.
-Tool sealant tight as shown in **Detail 30**, squeezing the sheet flat with a seam roller.

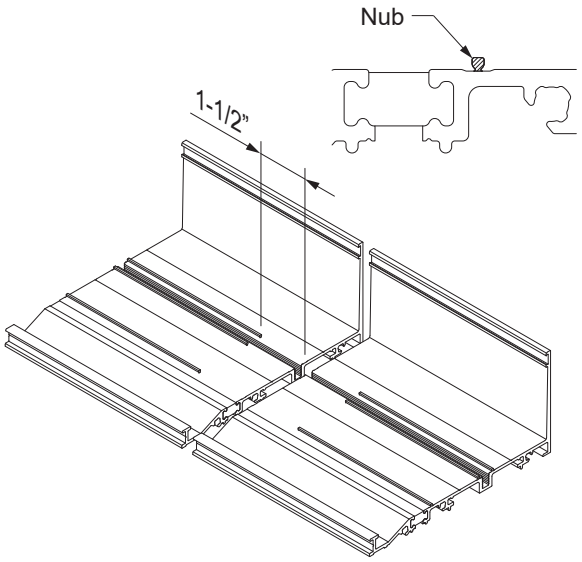

Detail 29

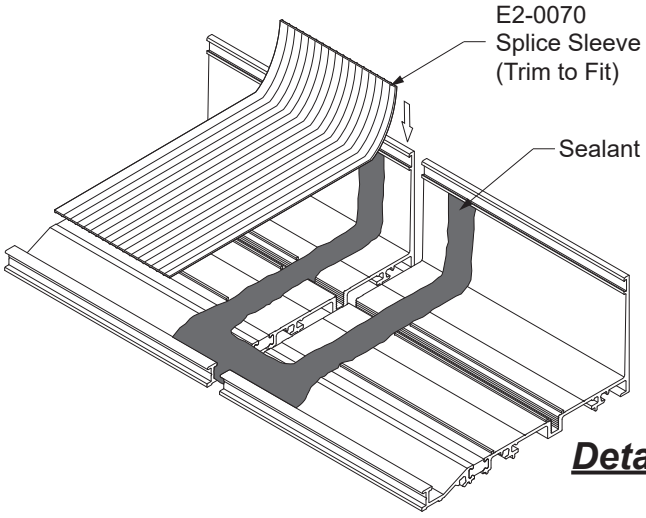

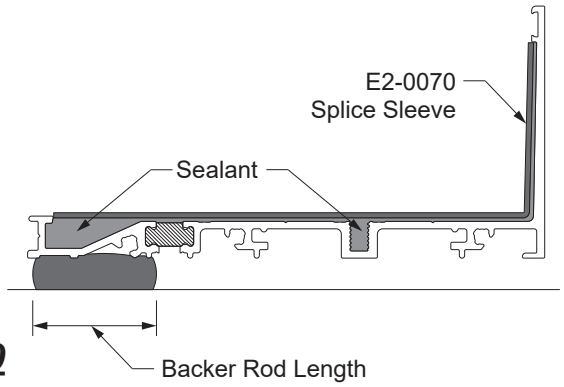

Detail 30

FRAME INSTALLATION

STEP 15 (Continued)
INSTALL SILL FLASHING SPLICE SLEEVE

-Thoroughly seal the small joint directly in front of the Silicone Splice Sleeve as shown in **Detail 31**.

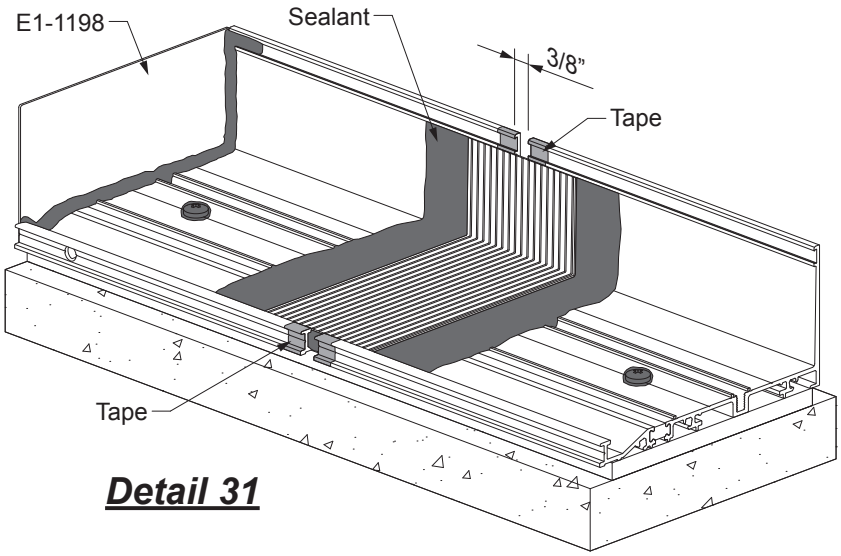

Detail 31

FRAME INSTALLATION

STEP 16
SLAB EDGE COVER INSTALLATION

Slab edge covers are installed from the head of the lowest elevation on upward.
The head receptors are installed first, then slab edge plates, then the BE9-2735 sill flashings with the E9-8222 slab edge adaptors.

STEP 16A
INSTALL HEAD RECEPTOR END DAMS & WEATHERING GASKETS

-Clean all joint surfaces using cleaner approved by sealant manufacturer.
-Apply sealant to the end of the head receptor as shown in **Detail 32.**
-Fasten the end dam to the head receptor with two UA-1212 screws, starting at the back, followed by the front.
-Tool sealant along the joint between the end dam and the head receptor as shown in **Detail 32.**
-Tape down the top corners to hold the end cap in place until the sealant cures.

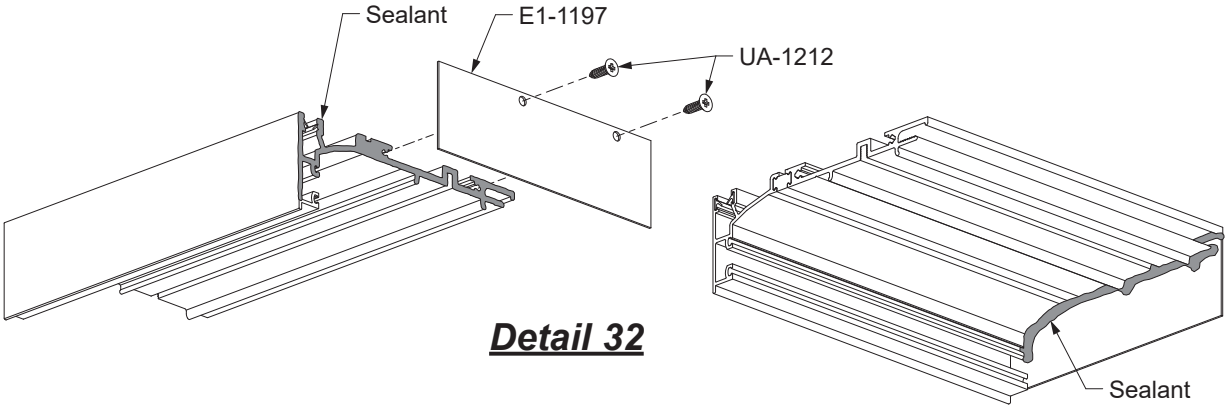

Detail 32

-Cut the E2-0065 slab edge weathering gaskets to head receptor length. Insert the gaskets into the slab edge reglets in the orientation as shown in **Detail 33**.

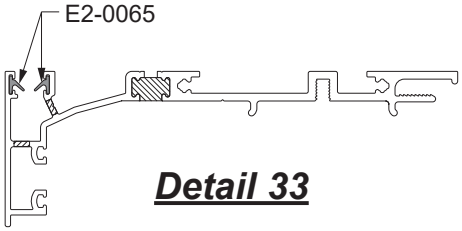

Detail 33

FRAME INSTALLATION

STEP 16B
INSTALL HEAD RECEPTOR

-Starting at the smallest opening height, install the head receptor with a minimum of 5/8” shim underneath. Head receptor must be installed level.
-Anchor the head receptor to the structure according to approved shop drawings and or P.E. calculations.
-Apply and tool sealant to the heads of all fasteners.

-Remove the front nub with a chisel or pliers on both sides of the splice joint 1-1/2” as shown in **Detail 34**.

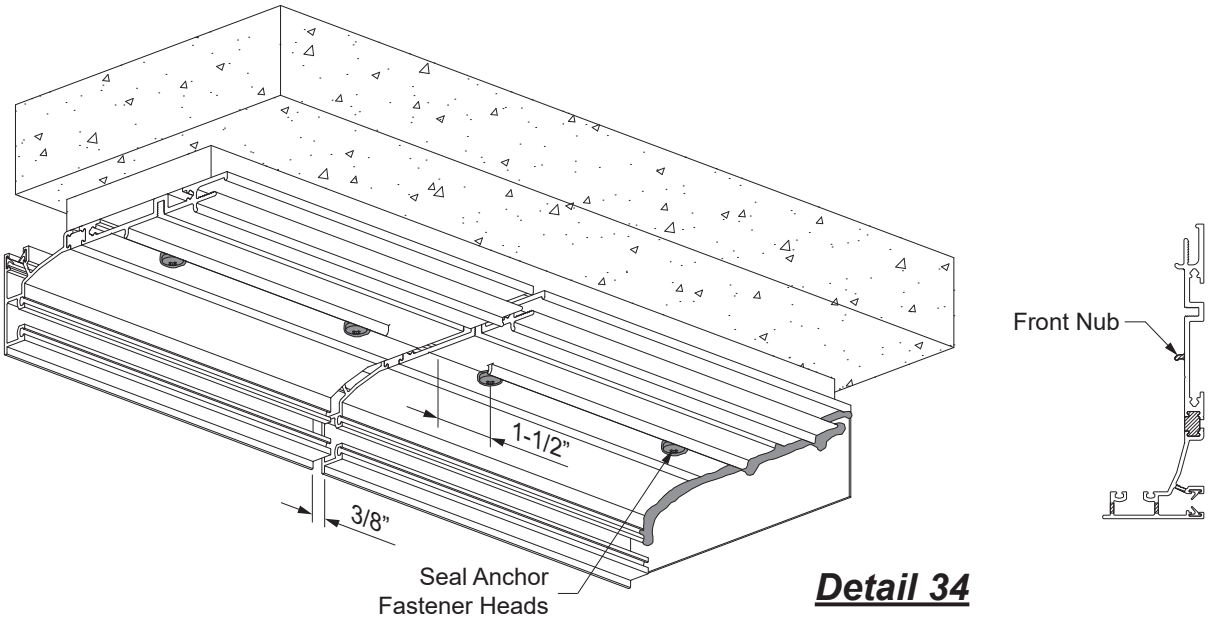

Detail 34

FRAME INSTALLATION

STEP 16B (Continued)
INSTALL HEAD RECEPTOR

-Position the Silicone Splice Sleeve against the front wall inside the head receptor, centered on the splice joint. Trim the splice sleeve at the rear nub of the head receptor.
-Clean head receptor and Silicone Splice Sleeve with isopropyl alcohol at the splice location.
-Seal the receptor at the splice location as shown in **Detail 35**, before positioning the flashing. Set the Silicone Splice Sleeve into the sealant.
-Tool sealant tight as shown in **Detail 35**, squeezing the sheet flat with a seam roller.

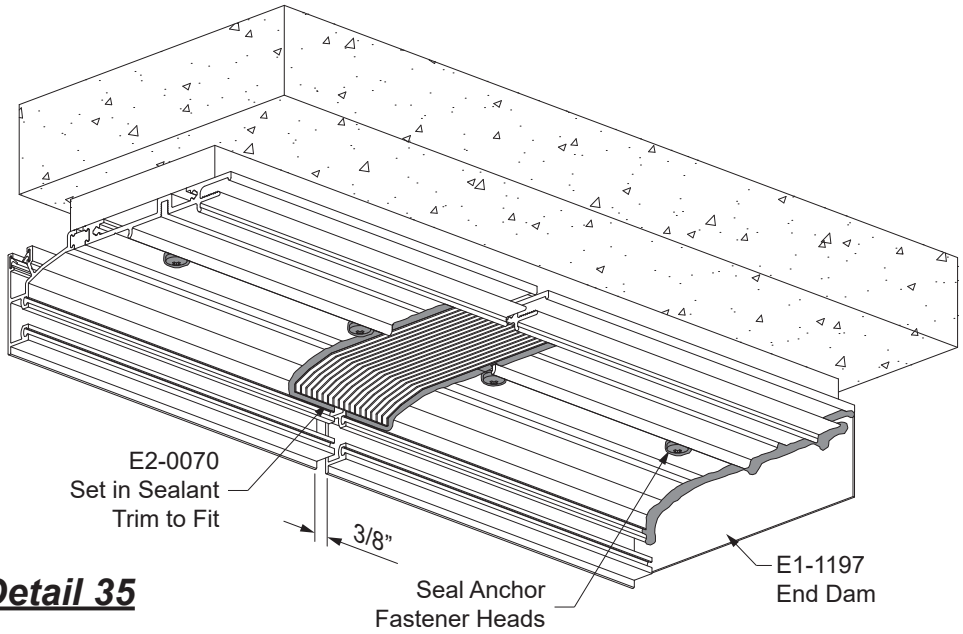

Detail 35

FRAME INSTALLATION

STEP 16B (Continued)
INSTALL HEAD RECEPTOR SPLICE SLEEVE

-At the slab edge receptacle of the head receptor, position an E2-0070 silicone splice sleeve centered on the splice joint, trim to fit in the receptacle. Do not allow the splice sleeve to interfere with the gasket reglets. Set the splice sleeve in sealant, similar to the procedure previously outlined for the underside of the head receptor.

See **Detail 36**.

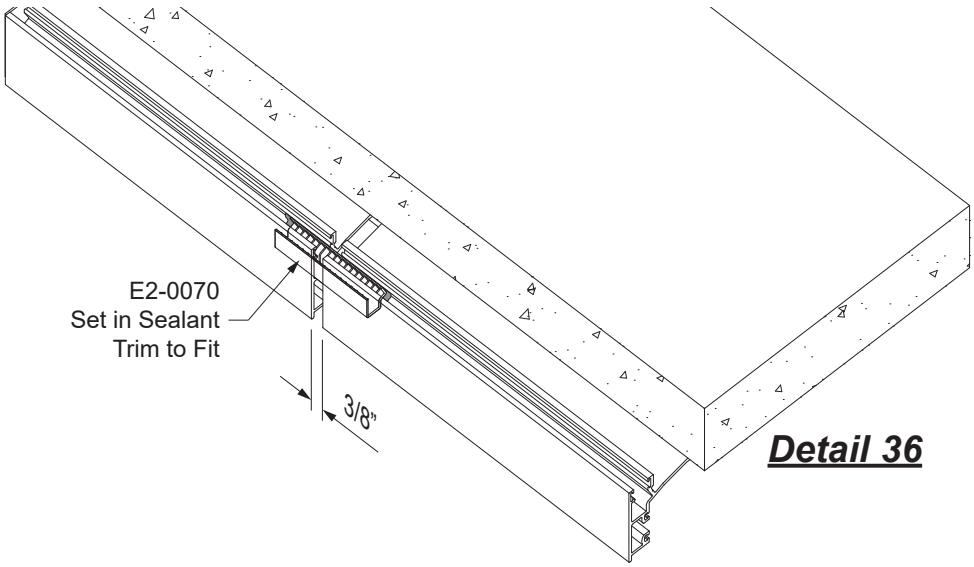

Detail 36

STEP 16B (Continued)
INSTALL HEAD RECEPTOR GASKETS

-Cut the E2-0097 head receptor gasket to receptor length plus 3/16" at each end for the splice joint.
-Insert the D-gasket into the head receptor as show, and seal the ends together at the splice joint.

See **Detail 37**.

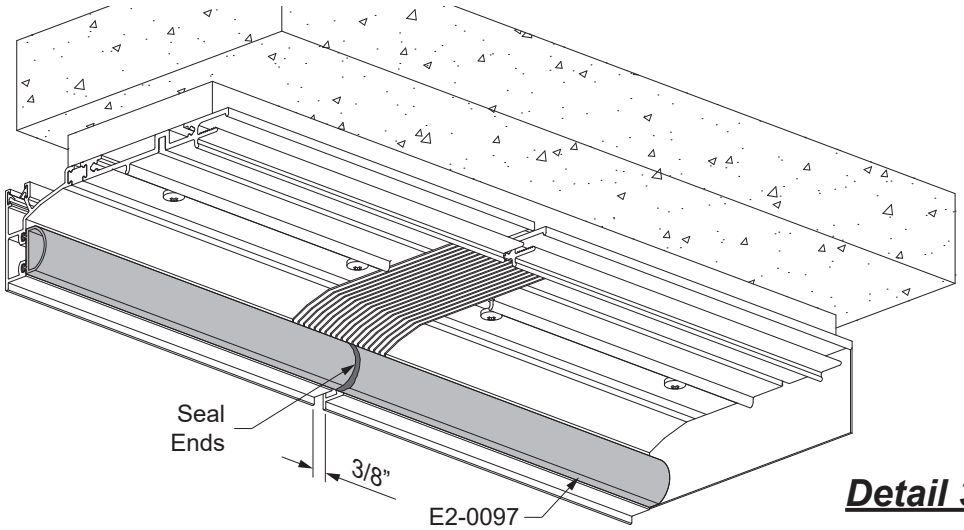

Detail 37

FRAME INSTALLATION

STEP 16B (Continued)
INSTALL HEAD RECEPTOR GASKETS

-Install E2-0054 setting blocks at 1/4 points of the aluminum plate.
-Install a weep baffle, E2-0099, over every weep hole location.
-Install gasket, E2-0051 onto the head receptor snap cover. Do not install the snap cover yet.

See **Detail 38**.

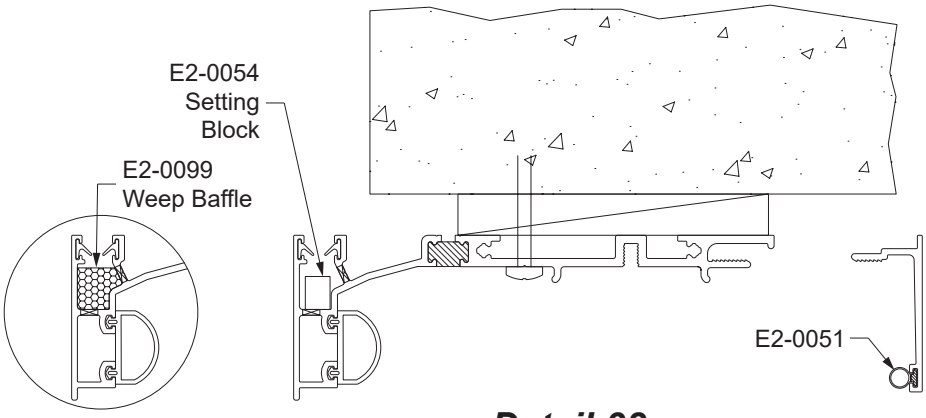

Detail 38

STEP 16C
ASSEMBLE SLAB EDGE COVER PLATES

-Clean the ends of the slab edge cover and attachment areas of end caps using a cleaner approved by sealant manufacturer.
-Apply and tool sealant to each end of the slab edge cover prior to attaching the end caps.
-Attach end caps to each end of the slab edge cover using (2) UA-1212 fasteners.
-Tool and wipe away any excess sealant at the joints.

See **Detail 39**.

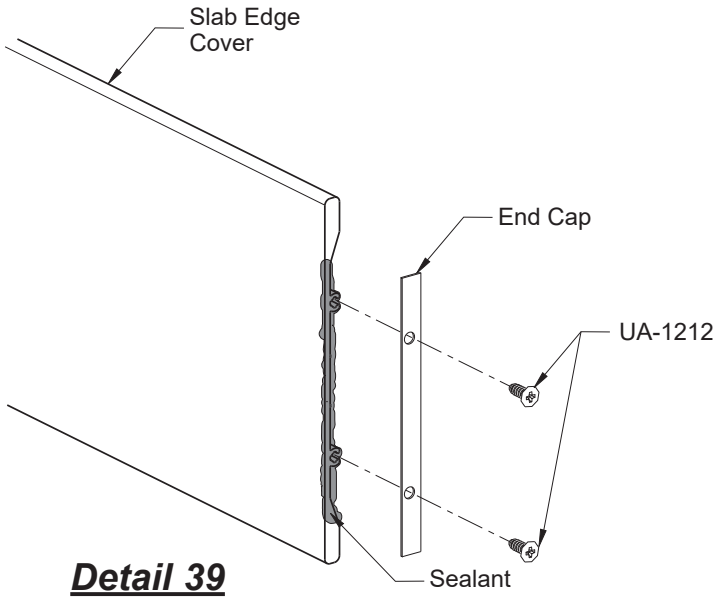

Detail 39

FRAME INSTALLATION

STEP 16D
INSTALL SLAB EDGE COVER FASCIA

-Slide the slab edge cover plate into the head receptor receptacle, seating it on top of the setting blocks.
-Be sure to leave a 3/8” joint between the plates for runs longer than 24’-0”.

See **Detail 40**.

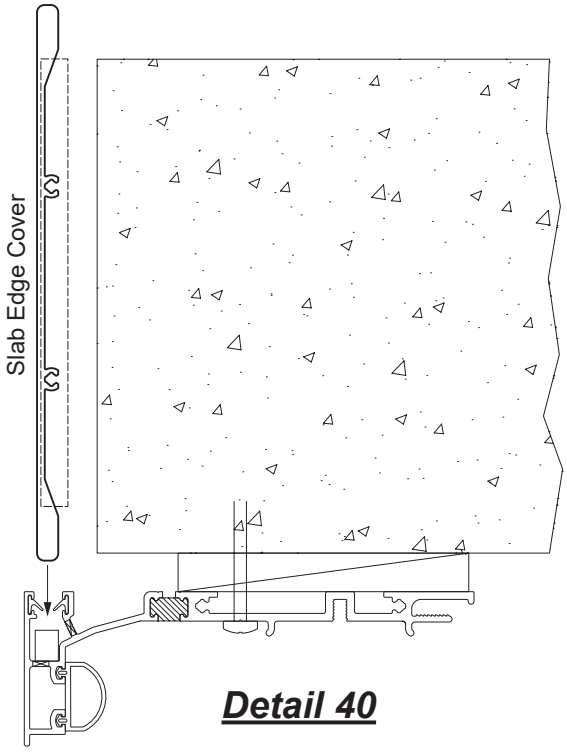

Detail 40

STEP 16E
INSTALL SILL FLASHING SPLICE SLEEVE FOR SLAB EDGE COVER

Before installing the sill flashing, install an E1-9959 splice sleeve at the underside of the sill flashing and slab edge adaptor.
-Apply bond breaker tape down the middle of the splice sleeve and sealant to one side of the splice sleeve as shown in **Detail 41**.
-Adhere the sealed half of the splice sleeve to the underside of the sill flashing.

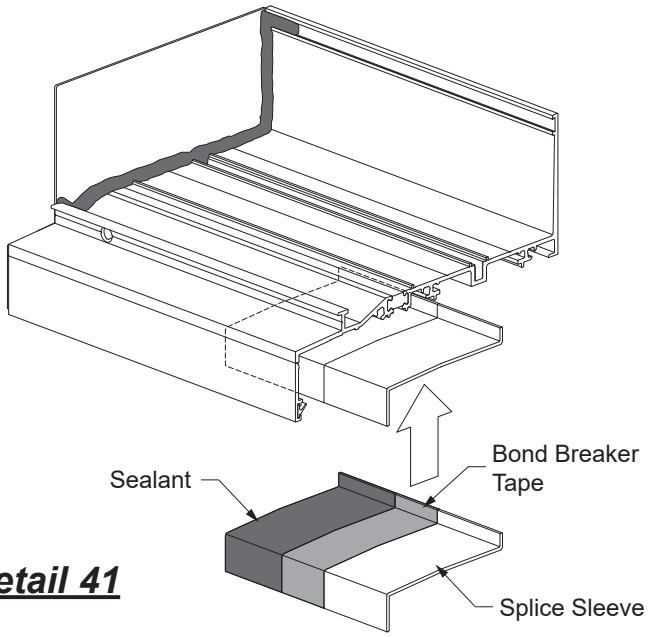

Detail 41

FRAME INSTALLATION

STEP 16E (Continued)
INSTALL SILL FLASHING SPLICE SLEEVE AT SLAB EDGE

-Install the sill flashing assembly onto the substrate, engaging the slab edge cover plates below and sealing all anchor fastener heads.
-Install the next slab edge sill flashing assembly onto the splice sleeve as shown in **Detail 42**. Be sure to leave a 3/8” joint between the sill flashing assemblies.

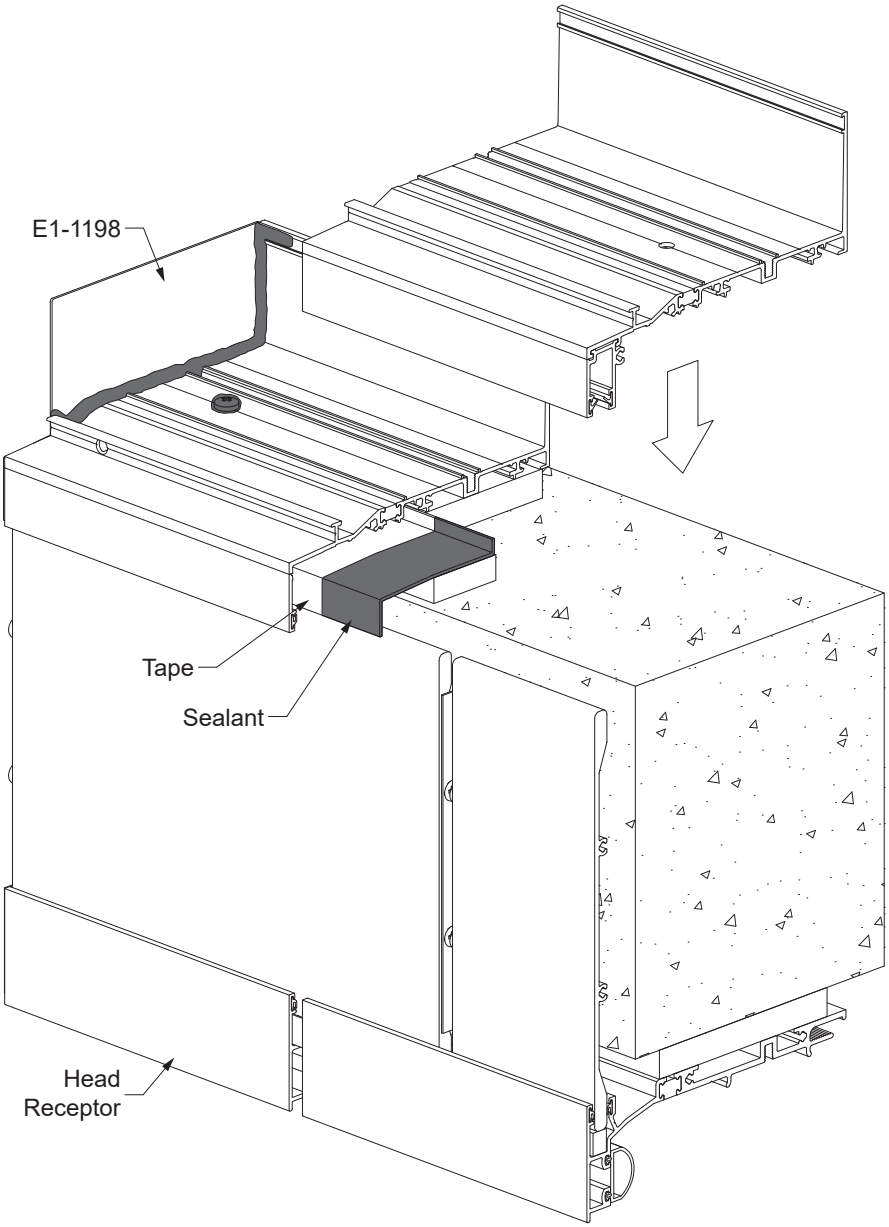

Detail 42

FRAME INSTALLATION

STEP 16E (Continued)
INSTALL SILL FLASHING SPLICE SLEEVE AT SLAB EDGE

-Installation of the E2-0070 splice sleeve is the same as previously outlined in **Step 15**, except to apply sealant to the joint at the slab edge cover plate, adaptor, and head receptor as shown in **Detail 43**.

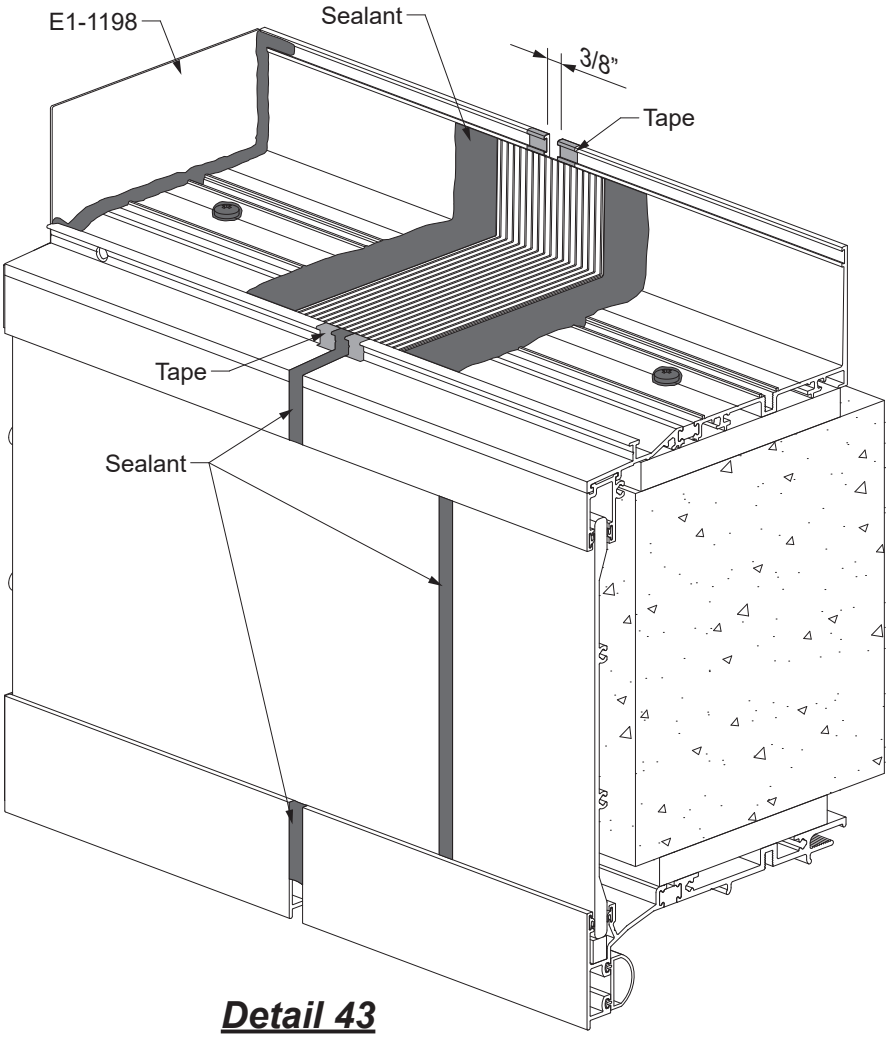

Detail 43

FRAME INSTALLATION

STEP 17
INSTALL BE9-2729 SILL FLASHING AT CORNERS

-Cut two 12” long pieces of sill flashing and miter(45° for 90° corners).
-Align the two pieces at the corner condition with the mitered ends pushed together tight and anchor the sill flashing as indicated on the approved shop drawings and or P.E. calculations.
-Apply and tool sealant to the mitered joint and anchor heads.

See **Detail 44**.

-Continue installing the rest of the sill flashing providing a 3/8” expansion joint at splices as shown in **Step 14 & 15** on **Page 38 & 39**.

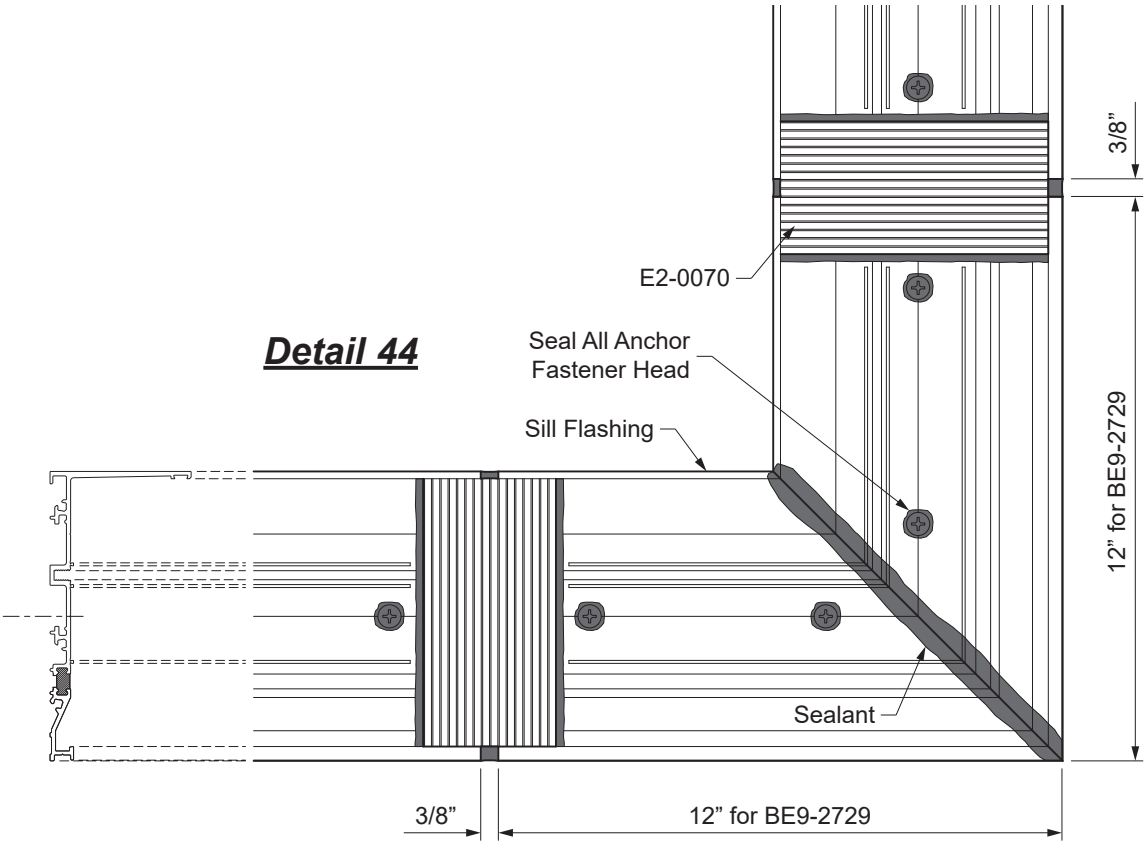

FRAME INSTALLATION

STEP 17A
INSTALL BE9-2735 SILL FLASHING AT CORNERS *

-Cut two 13-3/16” long pieces of BE9-2735 sill flashing and E9-8222 slab edge cover adaptor, and miter (45° for 90° corners). The head receptor that is to be installed below will also recieve the same miter cut fabrication.
-Install the head receptor using similar procedure as previously desribed for the sill flashing.
-Miter cut the slab edge cover plates 45° for 90° corners, such that upon installation, they leave a 1/2” gap at the corner.
-Fasten end caps onto the edge of the slab edge cover plates.
-Install the slab edge plates onto the setting blocks of the head receptor below.
-Align the two pieces of the BE9-2735 sill flashing at the corner condition with the mitered ends pushed together tight and anchor the sill flashing as indicated on the approved shop drawings and or P.E. calculations.
-Apply and tool sealant to the mitered joint and anchor heads.

See **Detail 45**.

-Continue installing the rest of the sill flashing providing a 3/8” expansion joint at splices as shown in **Step 16** on **Pages 27 to 34**.

*** Note:** Similar technique required for head receptor.

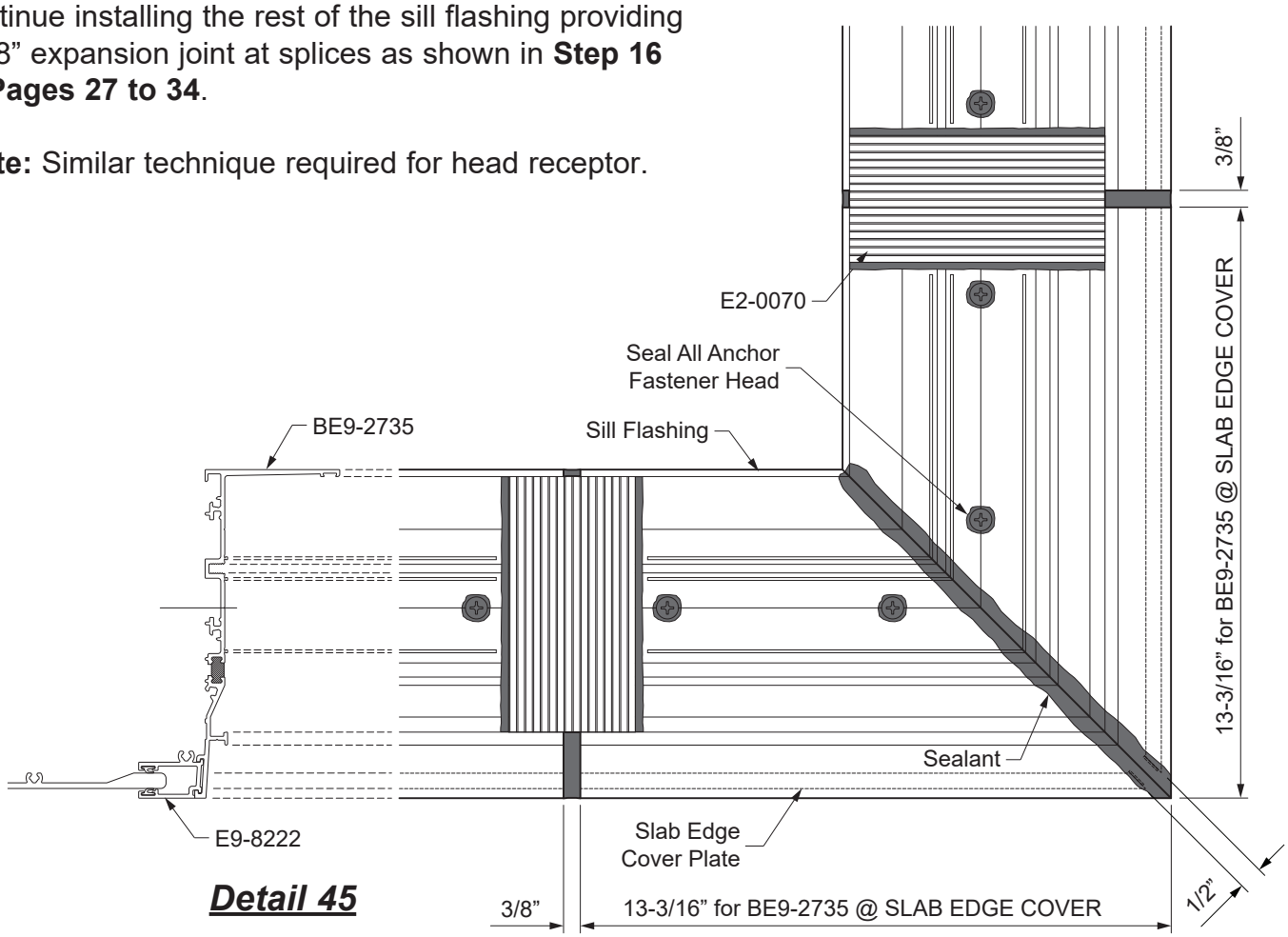

Detail 45

FRAME INSTALLATION

STEP 18
SILL PREPARATION

At every splice condition, apply bond breaker tape to the back of the sill member before the joint is sealed between the sill and sill flashing.

See **Detail 24.**

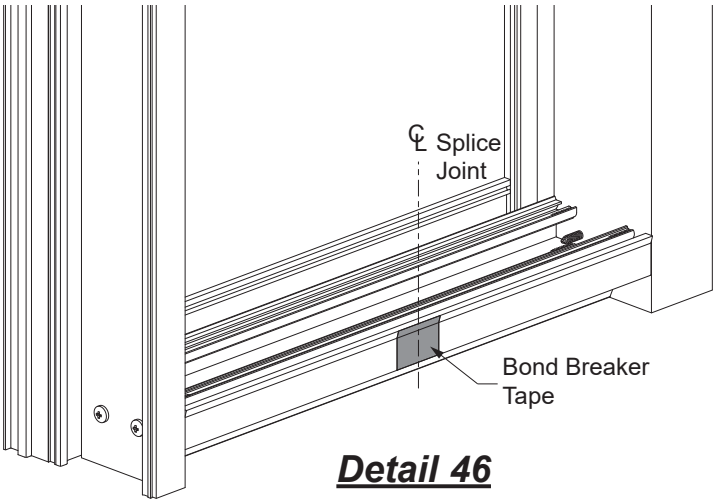

Detail 46

FRAME INSTALLATION

STEP 18 (Continued)
SILL PREPARATION

-Frame installation begins at the left jamb unit, working to the right. The female mullion half of the next unit engages into the male mullion half of the previously installed unit, from the front.
-Just prior to installing the first framing unit, apply sealant to the bottom lip at the back of the sill flashing as shown in **Detail 47**, immediately where the unit is to be installed.

Note: Overfilling this area will not allow engagement of the sill into the flashing.

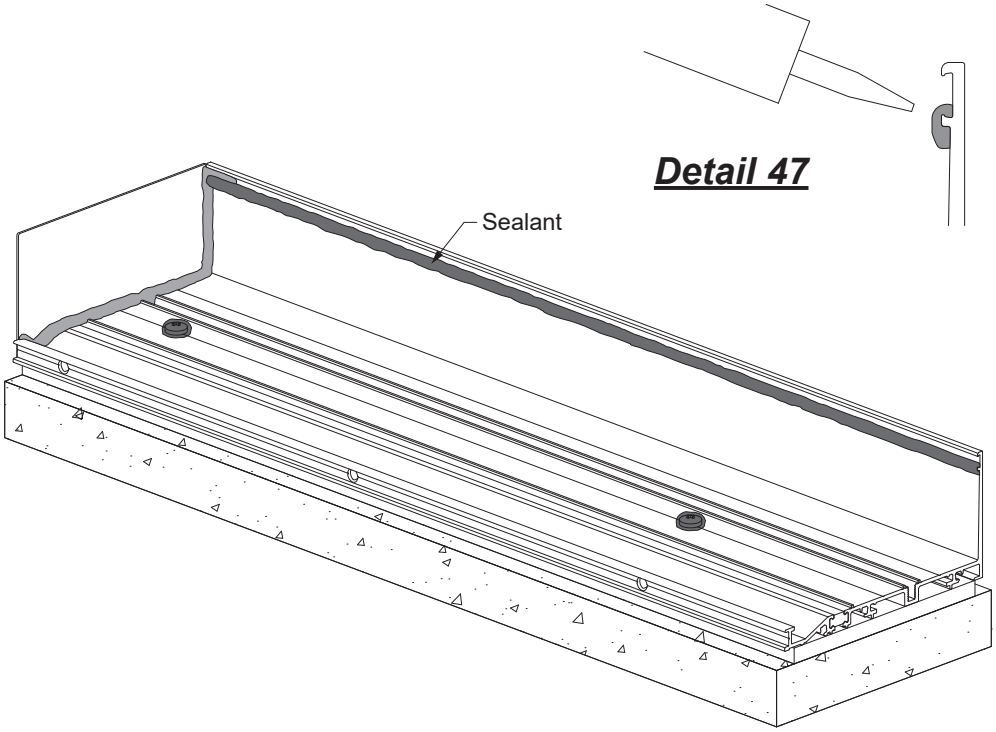

Detail 47

-Cut E2-0256 to the full length of the sill member and adhere it to the bottom of the sill at the face of the sill member.

See **Detail 48.**

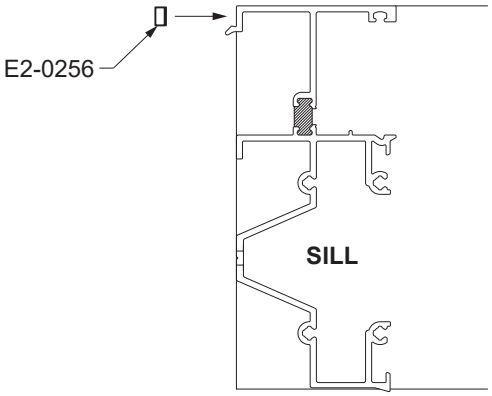

Detail 48

FRAME INSTALLATION

STEP 19
INSTALL FRAMES

Note: For impact glazing, channel or strap anchors are cut to Daylight Opening minus(-) 1/8” or per P.E. calculations.

-For frames that utilize the E1-1190 channel shaped head anchor, secure the anchor to the head using masking tape as shown in **Detail 49** prior to installation into the frame opening.
-Set the frame into place. See **Detail 50** below for shim space at the head.
-Taking care to ensure the framing unit is plumb, level, square, and true, anchor the framing unit to the substrate, first at the head using fasteners as specified by engineering calculations. See **Detail 50**.

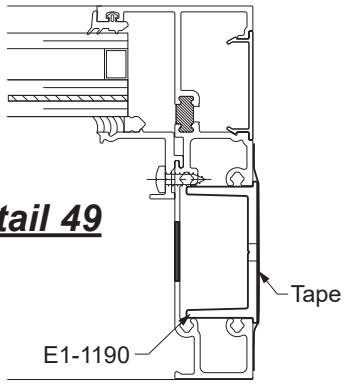

Detail 49

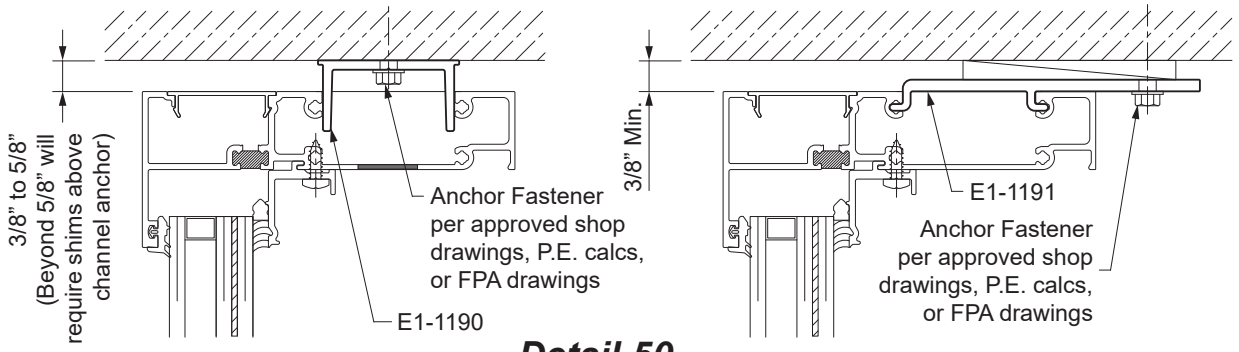

Detail 50

-Then, fasten the sill to the sill flashing using four (4) PM-2508-SS screws at 1-1/2” and 3” from each end of the sill.

See **Detail 51**.

-Then, anchor the jamb strap anchors to the substrate, if applicable.

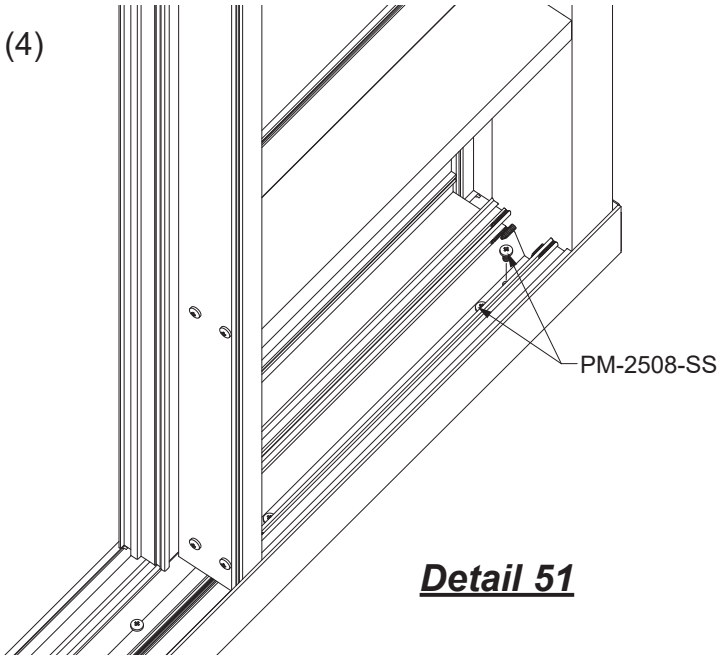

Detail 51

FRAME INSTALLATION

STEP 19 (Continued)
INSTALL FRAMES WITH SLAB EDGE COVER

Note: For impact glazing, the E9-2744 channel anchors are cut to Daylight Opening minus(-) 1/8” or per P.E. calculations.

-For frames with slab edge cover, secure the E1-1193 anchor to the head using masking tape as shown in **Detail 52** prior to installation into the frame opening.
-Set the frame into place. See **Detail 53** for shim space at head.
-Taking care to ensure the framing unit is plumb, level, square, and true, anchor the framing unit to the head receptor using fasteners as specified by engineering calculations.
-Installation of the anchor fasteners at the jambs and sill is the same as previously outlined on **Page 39**.
-Snap the interior cover onto the head receptor.

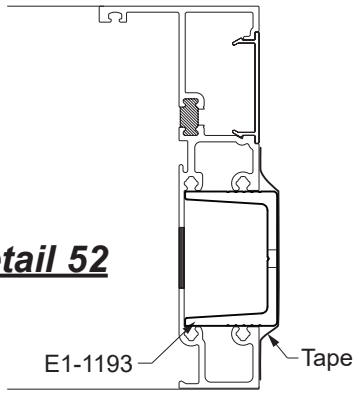

Detail 52

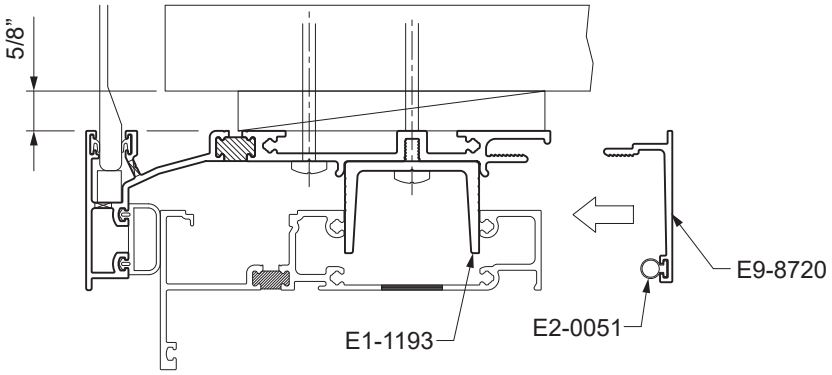

Detail 53

FRAME INSTALLATION

STEP 19 (Continued)
INSTALL FRAMES

-Just prior to installing the next unit, apply sealant to the back of the male mullion where it will interface with the female mullion of the next unit (from bottom of mullion and 6” up.)
-Apply sealant to the back of the sill flashing as shown in **Detail 54** immediately where the next unit is to be installed.

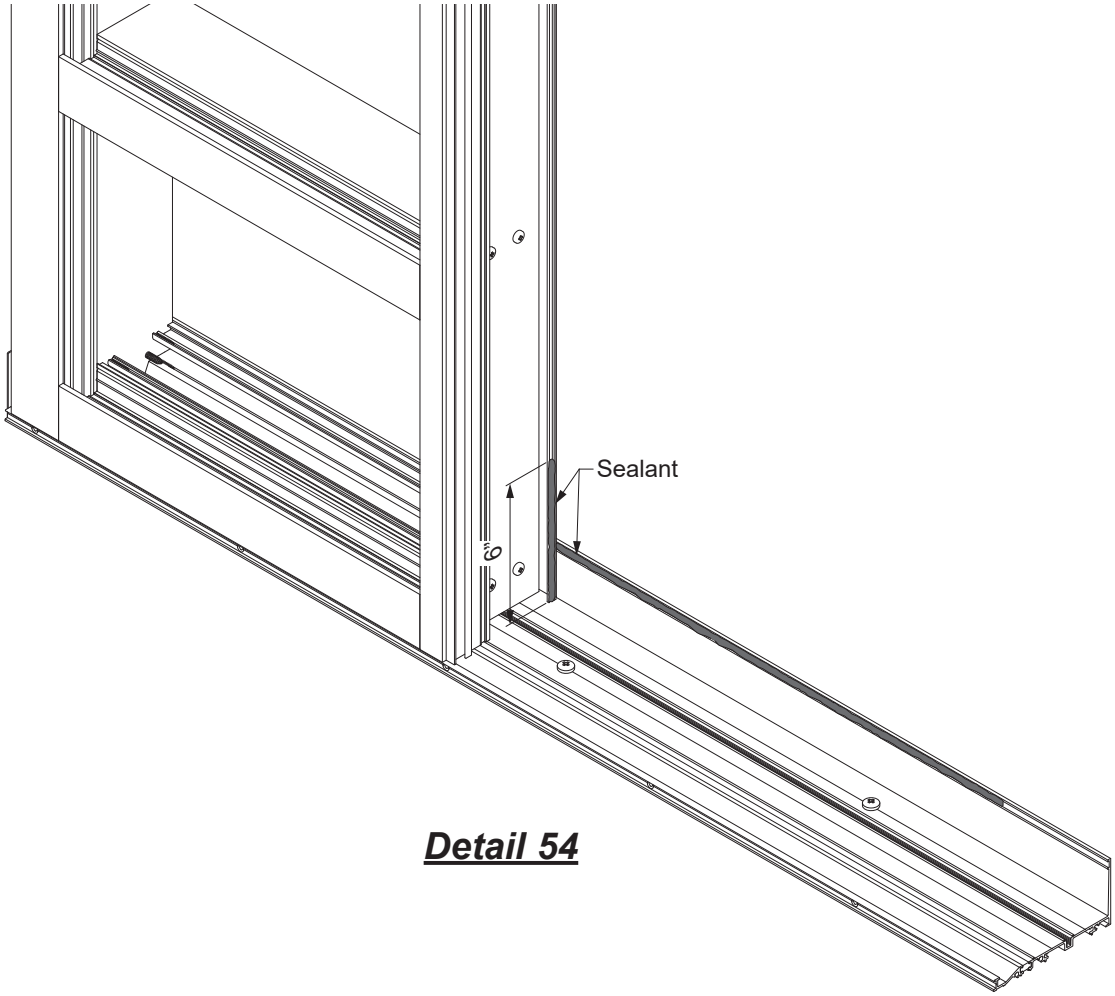

Detail 54

FRAME INSTALLATION

STEP 19 (Continued)
INSTALL FRAMES

-Install the next framing unit, taking care to ensure that the unit is plumb, level, square, and true, and that the female mullion fully interfaces with the male mullion from the previous unit.

See **Detail 55 & 55A**.

-Fill the void between the two units at the back of the sill flashing with sealant.

See **Detail 56**.

-Repeat **Step 19** until all units are installed.

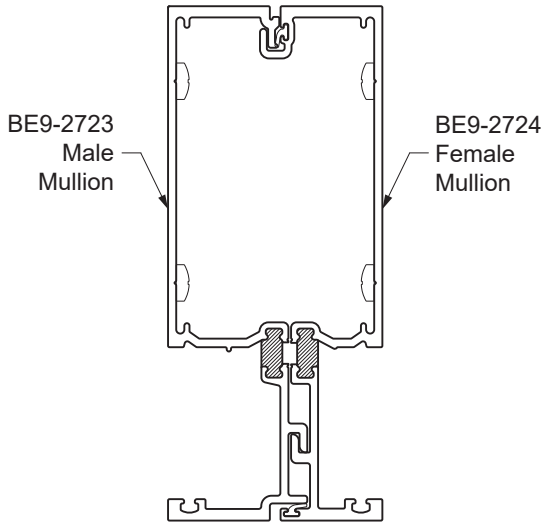

Detail 55

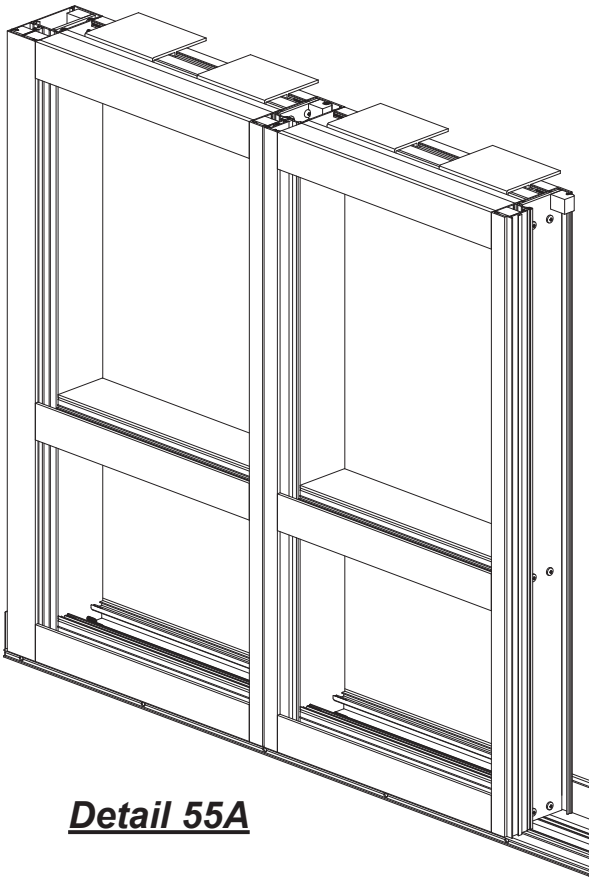

Detail 55A

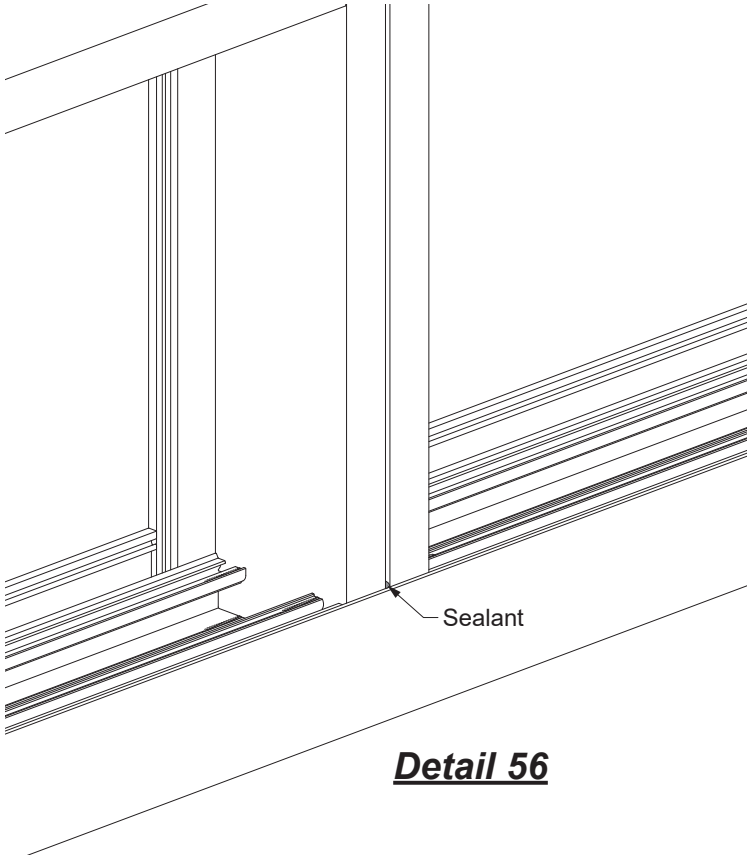

Detail 56

FRAME INSTALLATION

STEP 20
APPLY PERIMETER SEALANT

-Once all the units are installed in the frame unit, apply perimeter sealant required on interior and exterior of the window wall system.
-Install backer rod around the perimeter of the frame.
-Apply perimeter sealant to the joint between the frame and the structure.
-**Do not** seal sill flashing weep holes.

See **Detail 57**.

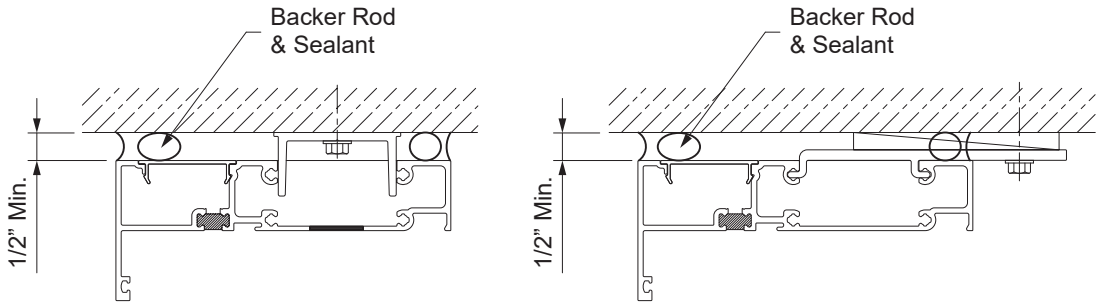

Detail 57

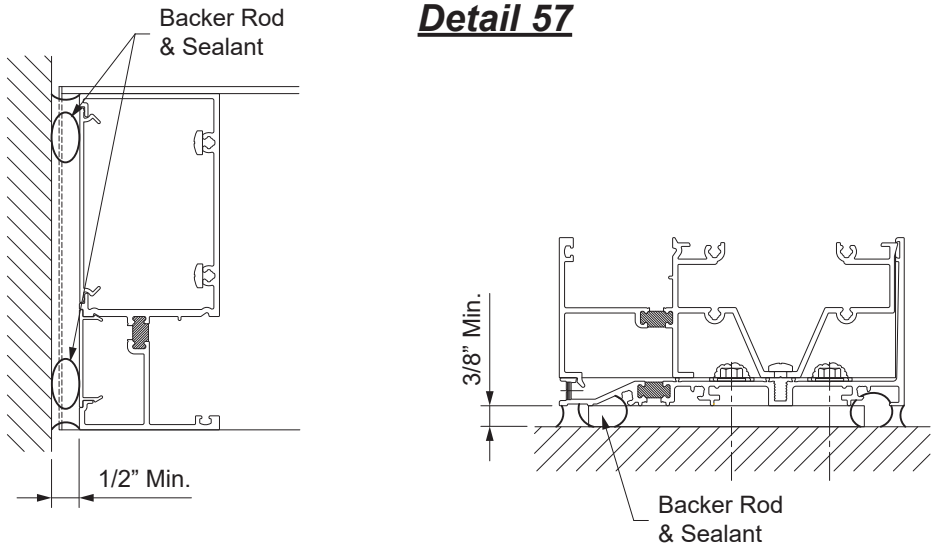

FRAME INSTALLATION

STEP 20A
APPLY PERIMETER SEALANT AT SLAB EDGE COVERS

-For slab edge covers at the head and sill, install a backer rod and apply sealant to the back of the sill flashing and head receptor.
-Tool sealant prior to skinning over.
-Install a backer rod and seal the jamb edge of the slab edge covers.

See **Detail 58**.

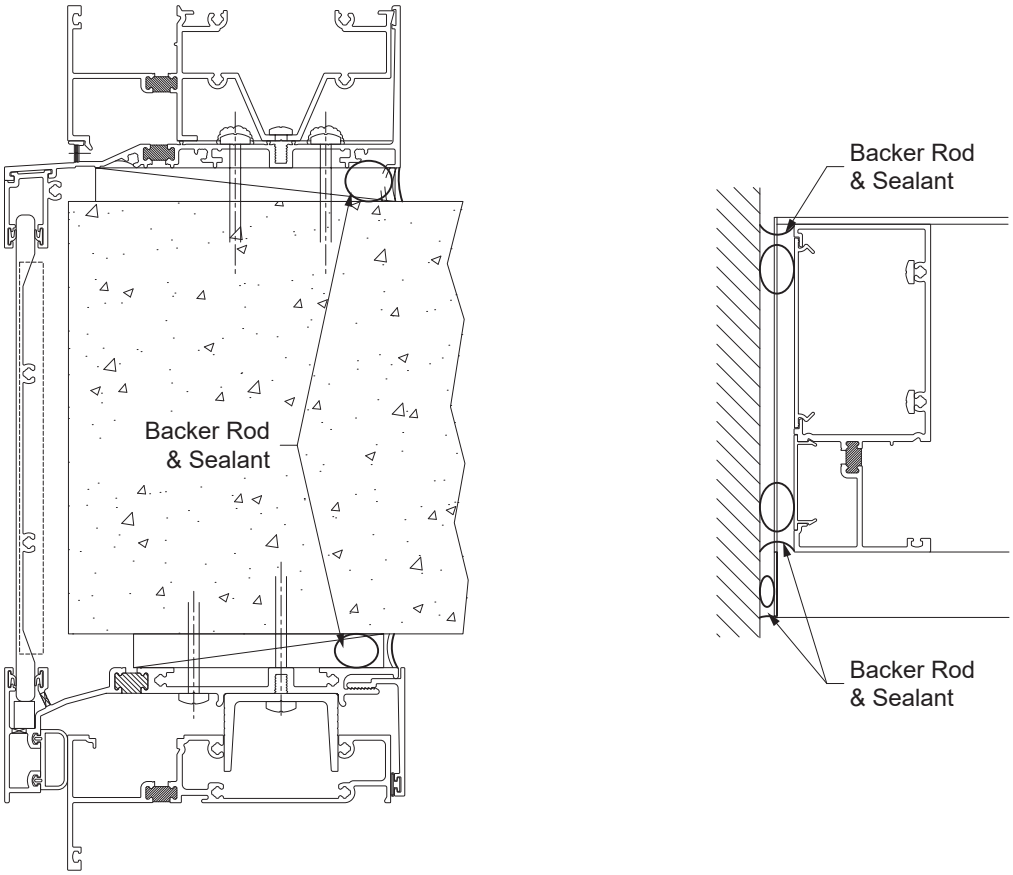

Detail 58

FRAME INSTALLATION

STEP 20B
APPLY SEALANT AT CORNER MULLIONS

-Apply backer rod and sealant the at the interior of the corner mullion, the full height of the mullion. Do not seal the exterior side.

See **Detail 59**.

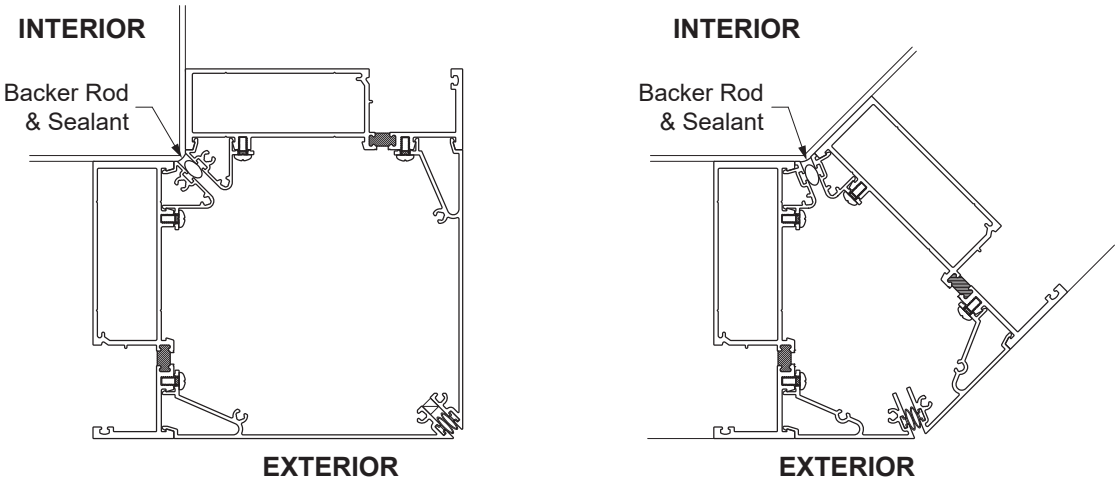

Detail 59

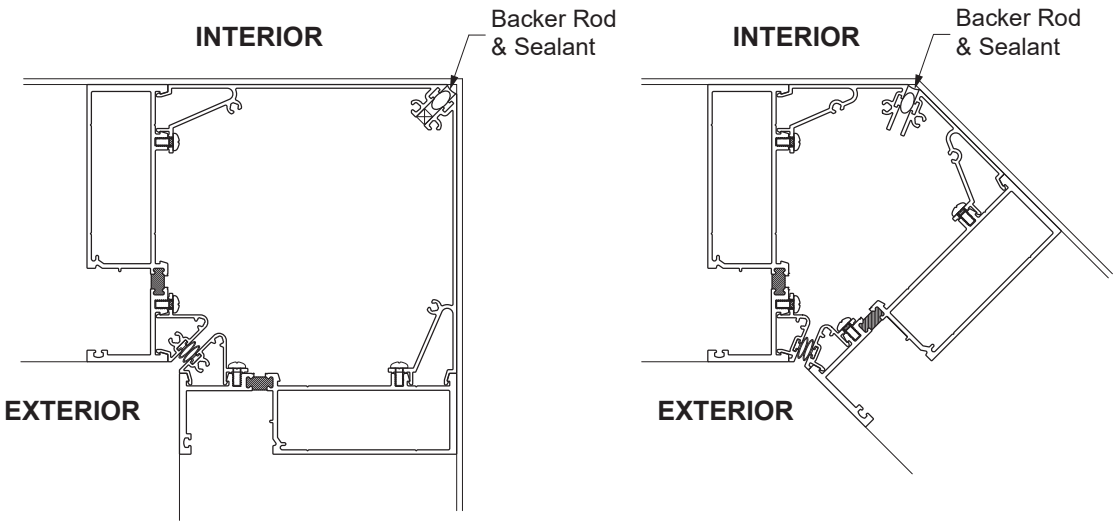

FRAME ASSEMBLY

STEP 21
INSTALL WATER DEFLECTOR

YHW 60 TU requires the installation of a water deflector, E2-0049, at the ends of every intermediate horizontal to keep water off of the insulating glass units.

-Peel away the protective paper from the bottom of the water deflector, E2-0049, and install the water deflector at the ends of each horizontal.

See **Detail 60**.

-Position the vertical leg of the water deflector against the end of the horizontal.

Note: For best adhesion, make sure that the horizontal is clean and dry.

-Apply and tool sealant along the edges of the deflector and down onto the horizontal. Seal the ramp of the water deflector to the glazing pocket.

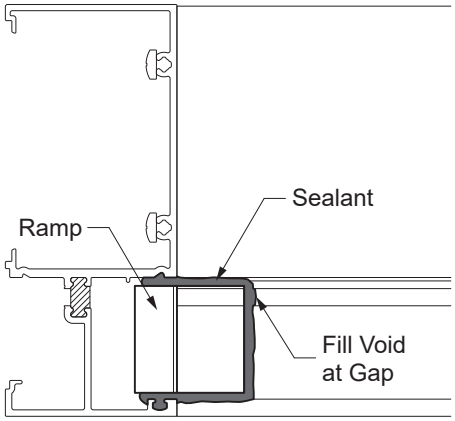

Detail 60

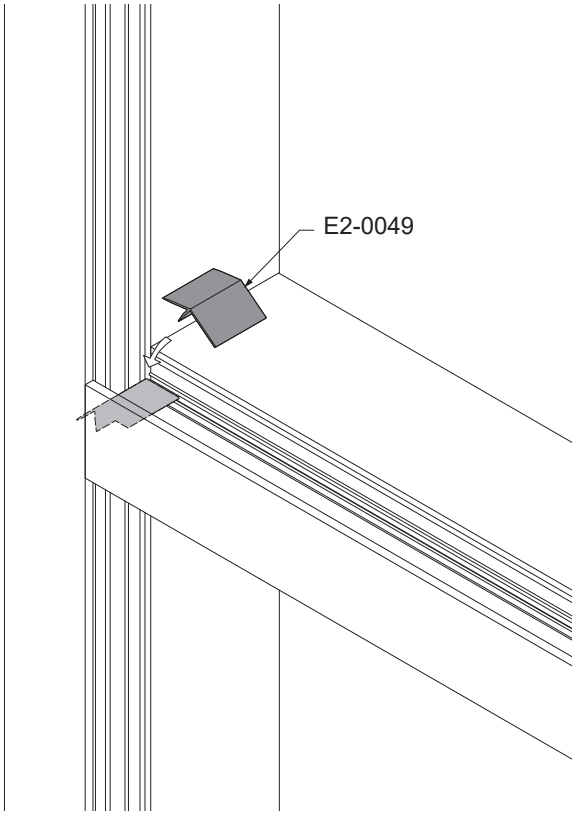

GLAZING

STEP 22
INSTALL EXTERIOR GLAZING GASKETS

For impact glazing: Push-in gasket, E2-0801 must be installed on the exterior prior to glazing.
For non-impact glazing: Push-in gasket, E2-0139 must be installed on the exterior prior to glazing.

-Using a small brush, clean out any dirt that may have accumulated in the gasket reglets.

Vertical glazing gaskets must be installed first:

-Cut vertical gaskets to the Daylight Opening plus(+) 3/4” plus(+) an additional 1/4” for each foot of length. For E2-0801 only, notch the ends of the vertical gasket as shown.
-Insert the gasket into the reglets at each end first; then insert the gasket at the midpoint of the opening.
-Push the gasket into the reglet starting at the midpoint and work towards each end.

See **Detail 61**.

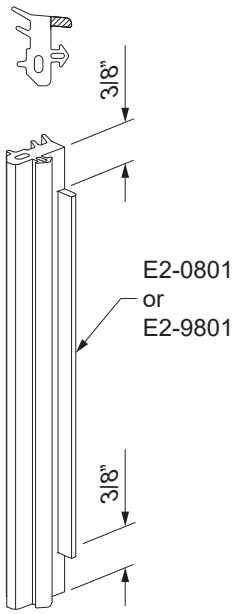

Detail 61
Impact Glazing
Only

GLAZING

STEP 22 (Continued)
INSTALL EXTERIOR GLAZING GASKETS

Install horizontal glazing gaskets next:
-Cut horizontal glazing gaskets to Daylight Opening plus(+) 1/4” for each foot of length.
-Apply sealant to each end of the horizontal glazing gasket prior to inserting into the reglet.
-Insert the gasket into the reglet at each end first; the insert the gasket at the midpoint of the opening.
-Push the gasket into the reglet starting at the midpoint and work towards each end.
-Tool the excess sealant at the gasket corners to ensure a watertight seal.

See **Detail 62**.

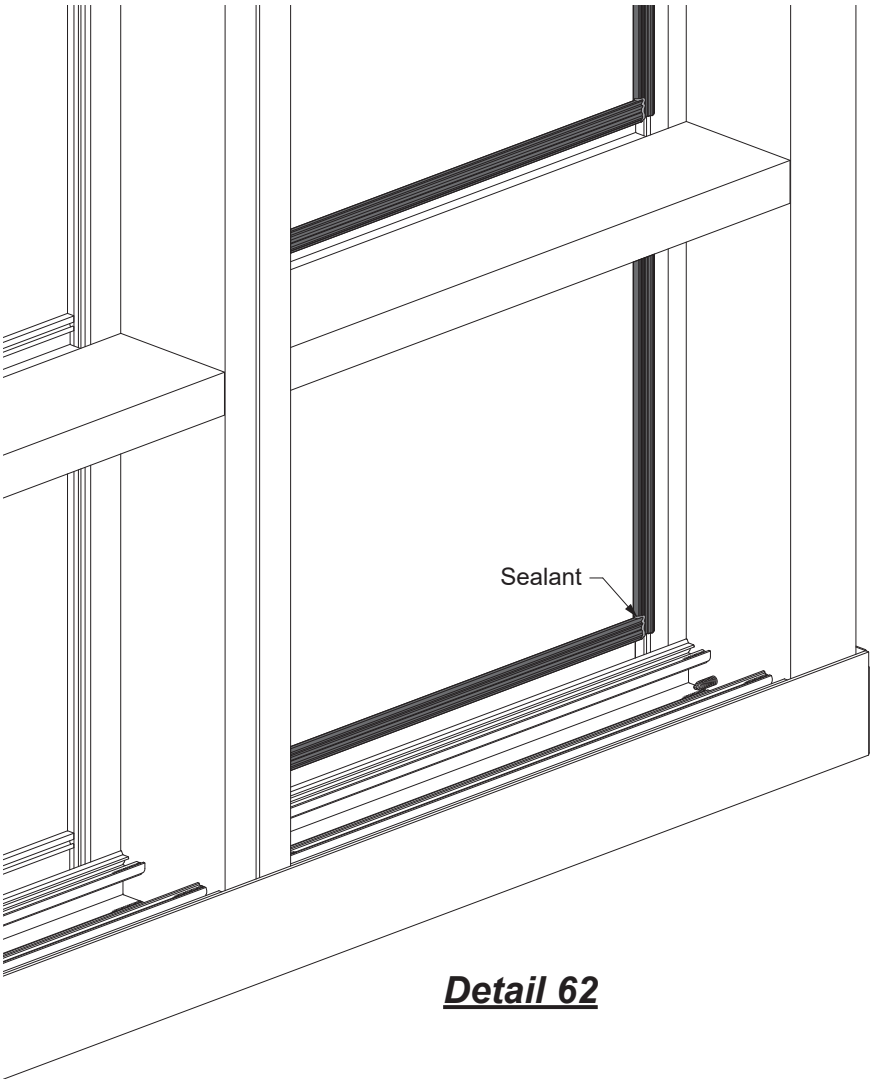

Detail 62

GLAZING

STEP 23
INSTALL SETTING / SIDE BLOCKS

-Apply setting blocks into the glazing pockets for every sill and intermediate horizontal as shown in **Detail 63** at quarter points at every daylight opening.

For Dry Glazing Only:
-Apply side blocks to the female mullion only at the midpoint vertically at every daylight opening as shown in **Detail 63**.

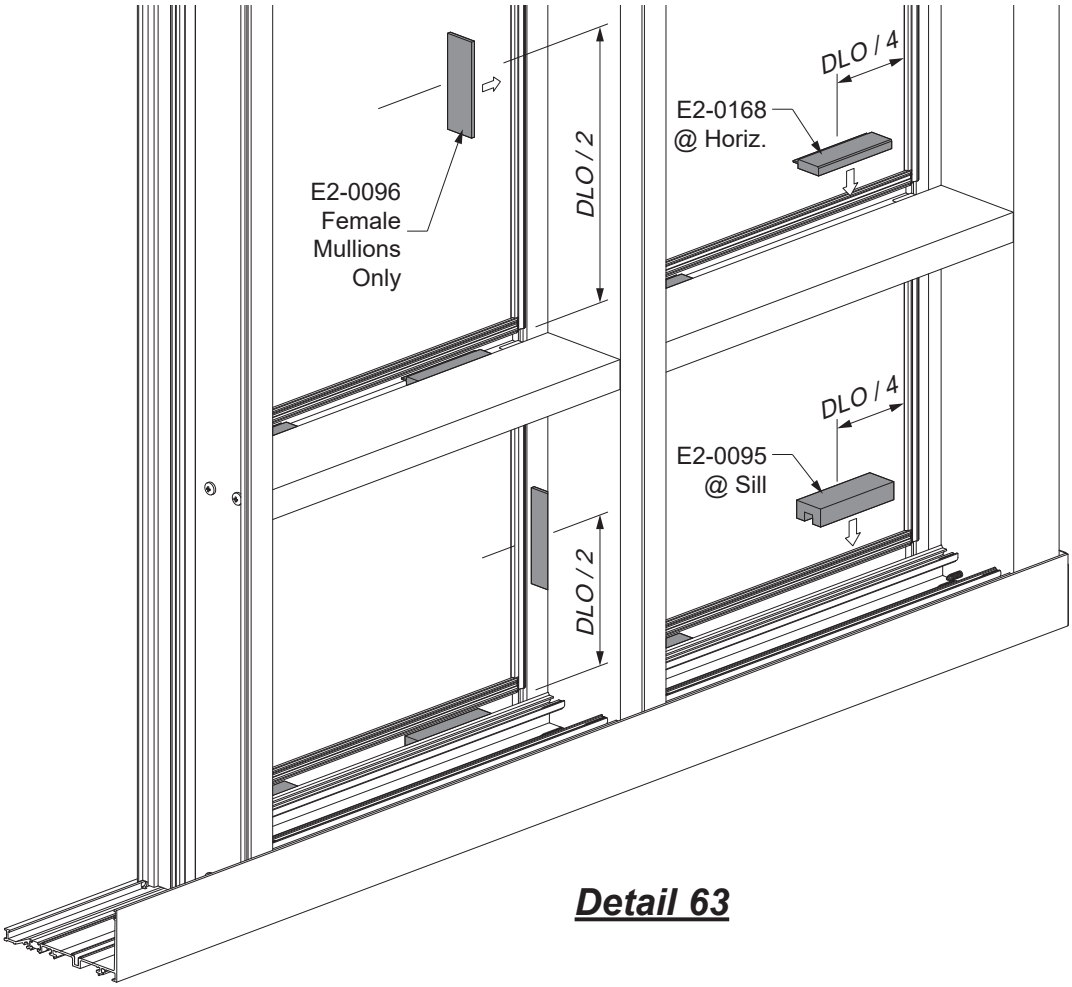

Detail 63

GLAZING

STEP 24
INSTALL GLASS

Determine the glass size:

	Width	Height
Standard Glazing	**D.L.O. + 1”**	**D.L.O. + 1”**

-Install the glass lites into the daylight openings. Bring the glass lites into the deep glazing pocket first. Then move the glass lites to their proper positions ensuring a 1/2” glass bite all around, and directly on top of the setting blocks.

See **Details 64**.

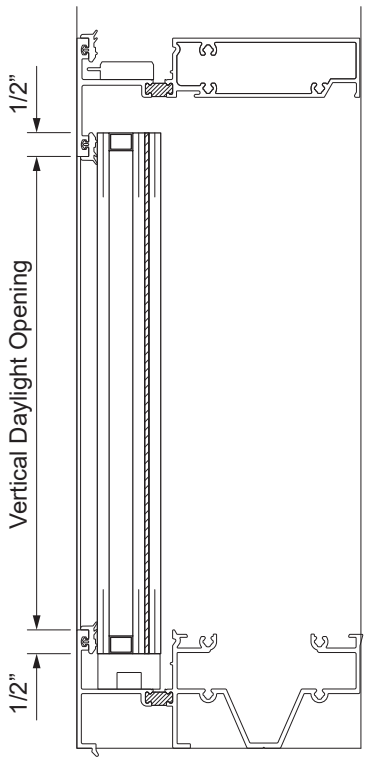

Detail 64

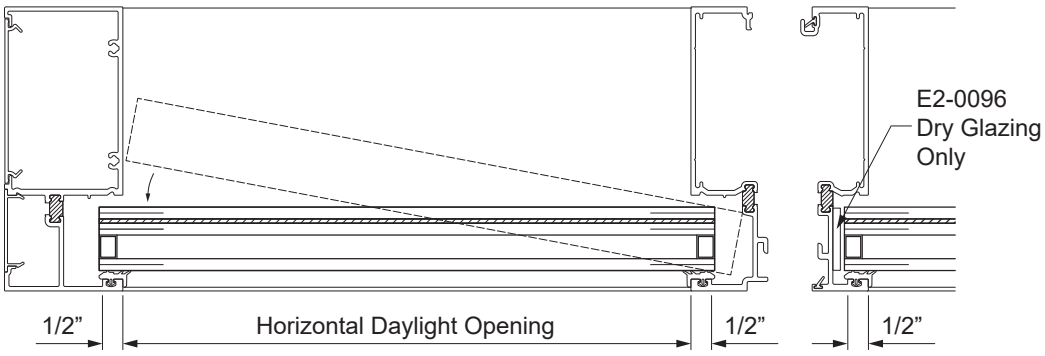

GLAZING

STEP 25 (DRY GLAZING ONLY)
INSTALL ANTI-WALK BLOCKS

Anti-walk blocks must be installed in the vertical deep glazing pocket of each lite centered along the daylight opening.

E2-0519 for all jambs
E2-0153 at male mullion

-Flatten the anti-walk block against the surface of the glass and push it into the opening between the glass and the mullion until it is released into the glazing pocket.

See **Detail 65**.

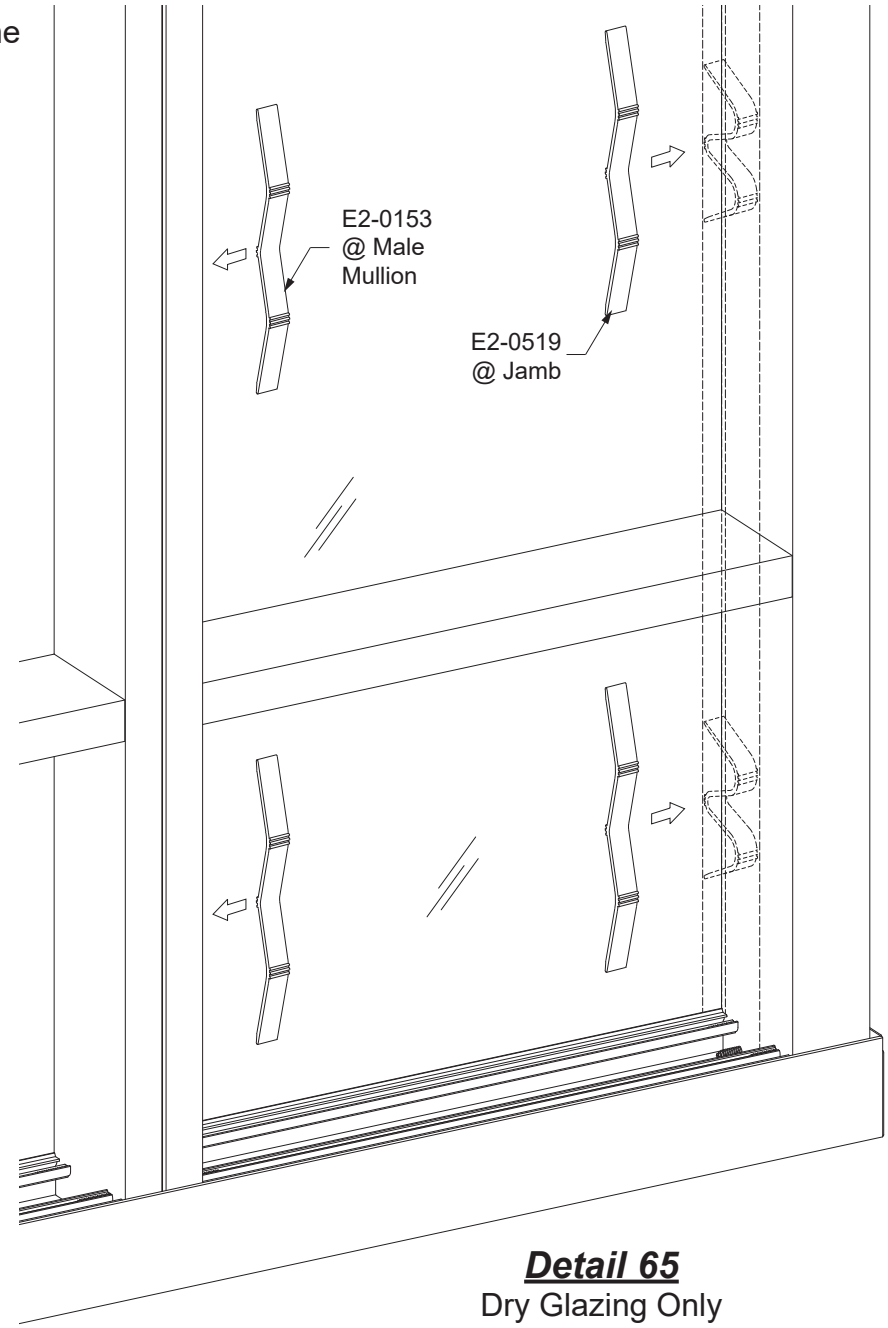

Detail 65
Dry Glazing Only

GLAZING

STEP 26
INSTALL GLASS STOPS

-Apply sealant to the ends of the E9-2730 glass stops.
-Set the glass stops in place at the top of each daylight opening and secure the stop in place by drilling #12 tap holes (0.189” dia.) and using two PC-1210 fasteners per glass stop.

See **Detail 66**.

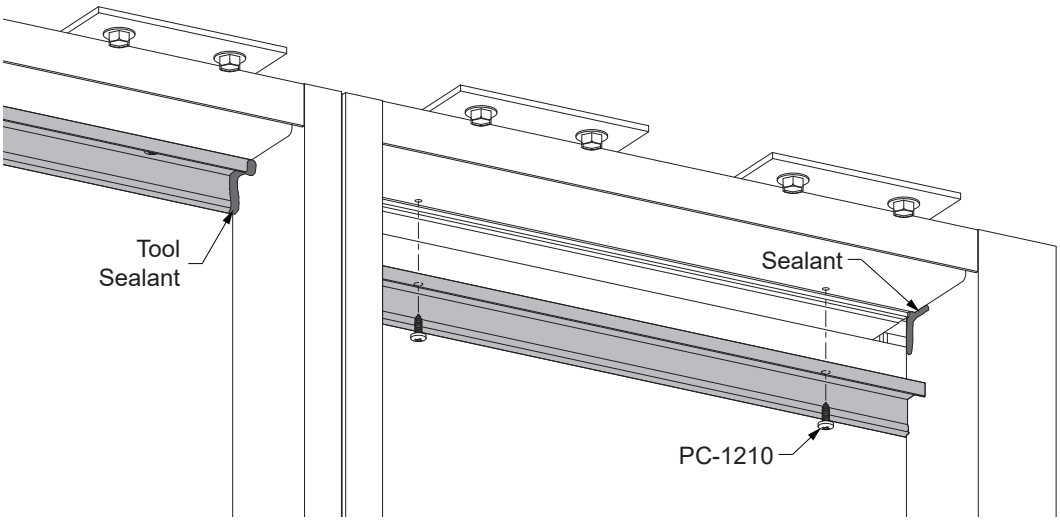

Detail 66

GLAZING

STEP 27
INSTALL INTERIOR SPACERS (WET GLAZING)

Vertical interior spacers are to be installed prior to the horizontal spacers.
-Cut vertical push-in spacers to Daylight Opening plus(+) 1-1/4”.
-Install vertical spacers, centered on the Daylight Opening at a depth of 13/32” from the Daylight Opening using a spacer block similar ot the one shown on **Detail 68** on **Page 54**. Insert the spacer into the glazing pocket at each end first, then insert the spacer at the midpoint of the opening and work towards each end.

See **Detail 67**.

Note: E2-0359 is used for laminated 1-5/16” glass and should be installed with minimum effort. If the glass is thicker than standard, an alternate spacer will be required to maintain an easy “push in” of the spacer.

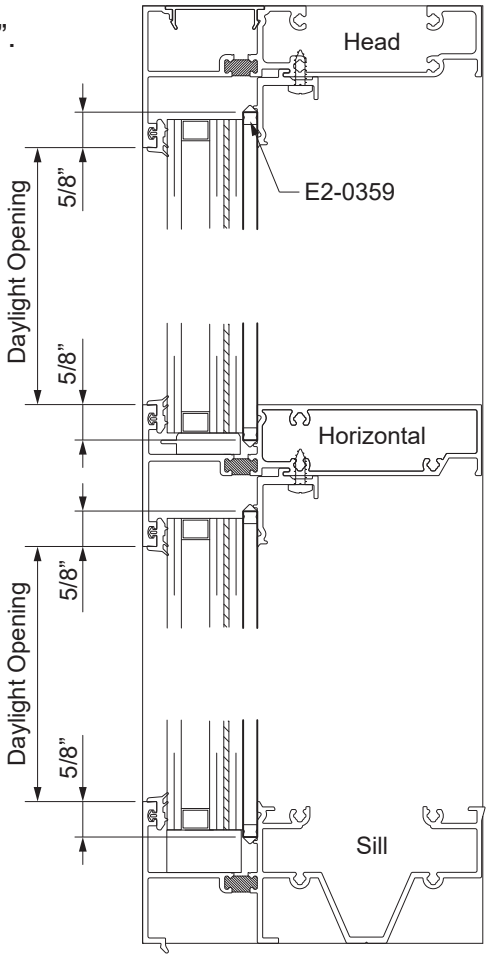

Glazing	Ext. Gasket	Int. Gasket
1-3/16” Dry Non-Impact	E2-0128	E2-0802
1-1/4” Dry Non-Impact	E2-0139	E2-0802
1-5/16” Dry* 0.060” Interlayer	E2-0801	E1-0802
1-5/16” Wet* 0.090” Interlayer	E2-9801	E2-0359

* Nominal Dimension

Detail 67
Wet Glazing Only

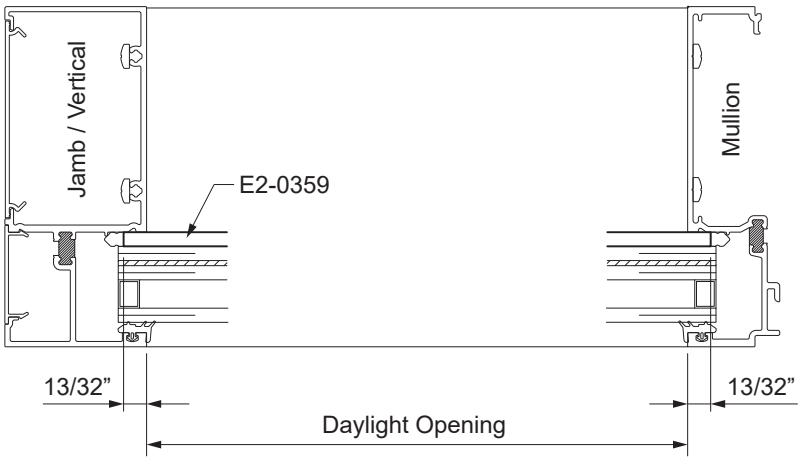

GLAZING

STEP 27 (Continued)
INSTALL INTERIOR SPACERS (WET GLAZING)

-Cut horizontal E2-0359 spacers to Daylight Opening plus(+) 3/4”.
-Insert the spacer into the glazing pocket at each end first; push each end tight against the vertical spacer.
-Then insert the spacer at the midpoint of the opening and push spacer into the glazing pocket starting at the midpoint and work towards each end.

See **Detail 68**.

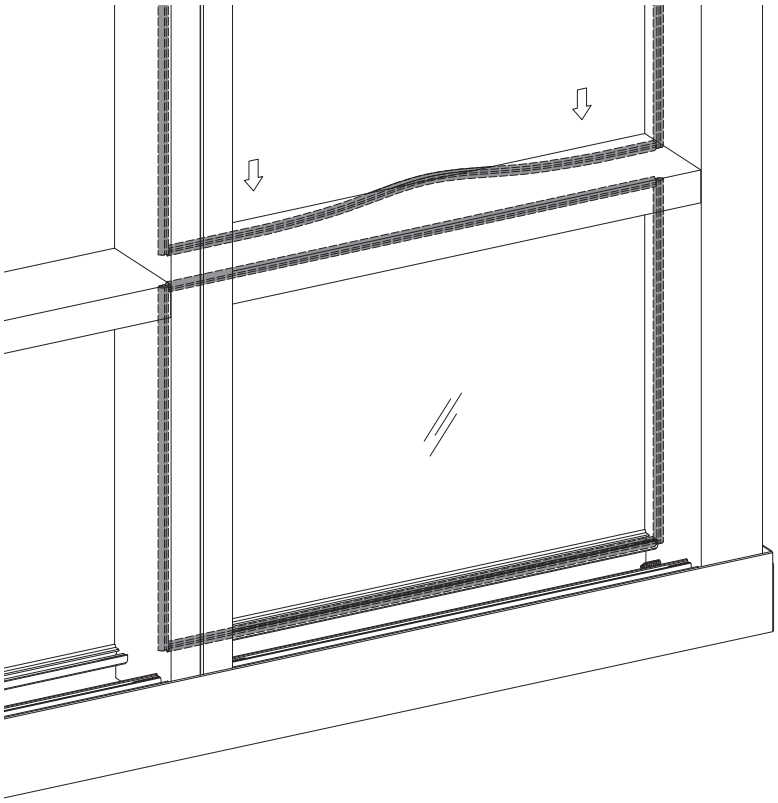

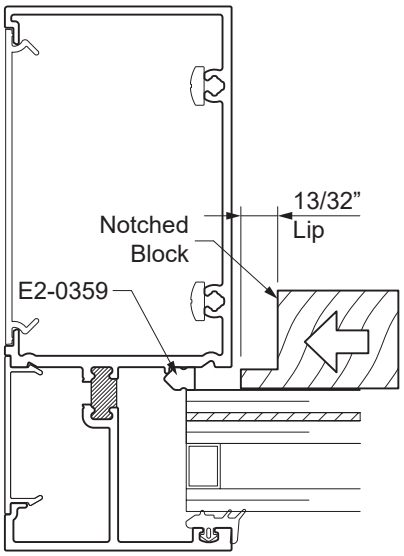

Detail 68
Wet Glazing Only

GLAZING

STEP 27 (Continued)
INSTALL INTERIOR SPACERS (DRY GLAZING)

-Cut E2-0802 interior gaskets to Daylight Opening plus(+) 1/8” per foot of length.
-Install the vertical gaskets first.
-Apply silicone at all corners.
-Next, insert the horizontal gasket into the glazing pocket, centered on the Daylight Opening at each end first; then insert the gasket at the midpoint of the opening and work towards each end. Ensure the horizontal and vertical gaskets are sealed together. Tool excess silicone smooth.

See **Detail 69**.

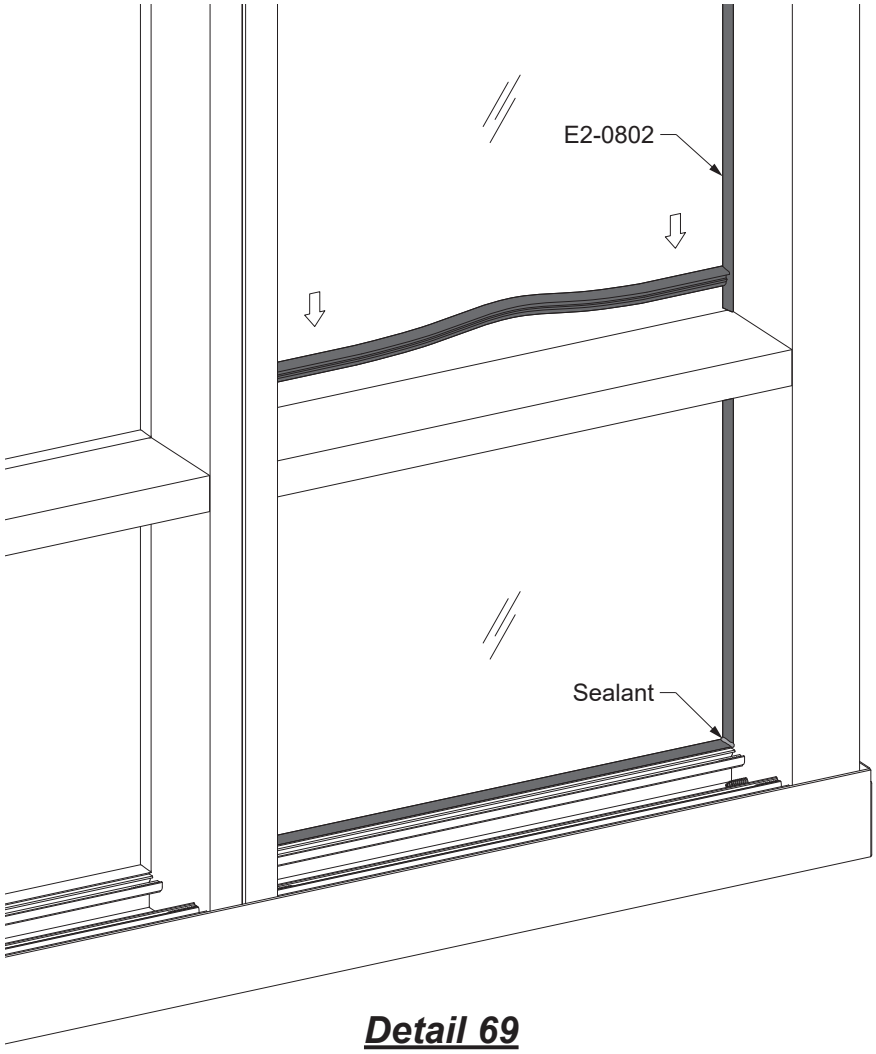

Detail 69
Dry Glazing Only

GLAZING

STEP 28
APPLY SEALANT (WET GLAZING)

-Apply masking tape to the adjacent surfaces of the glass and the framing members as shown in **Detail 70**.
-Apply sealant to the void between the glass and the framing members, filling the void. Tool the sealant.
-Remove masking tape immediately after application. Do not let the sealant skin over.

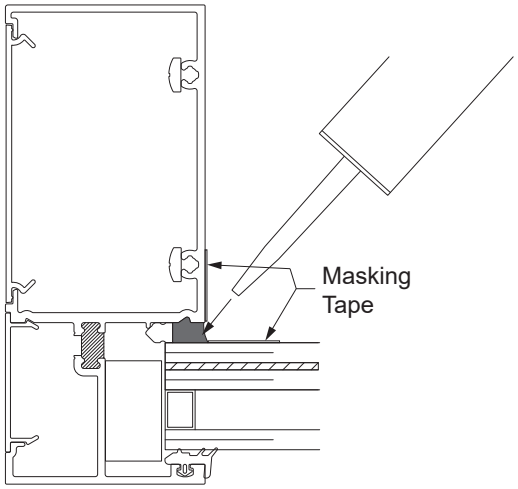

Detail 70
Wet Glazing Only

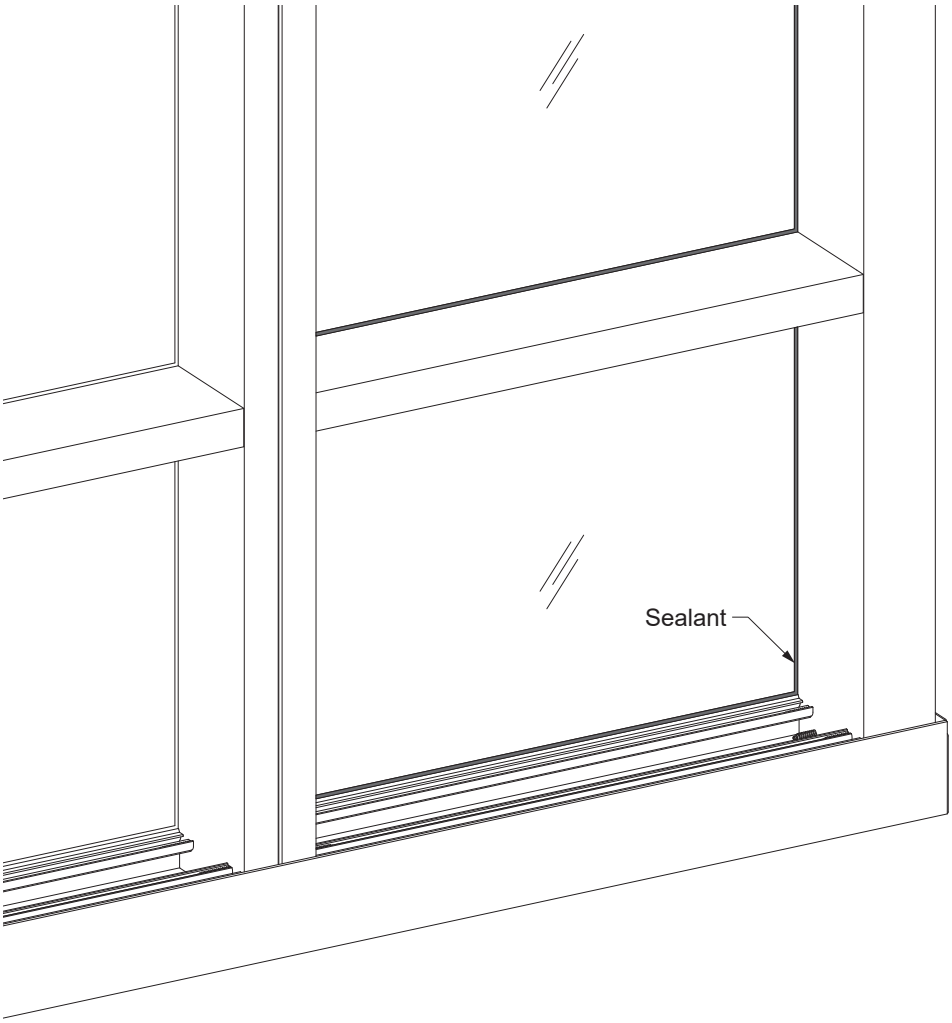

FINALIZING INSTALLATION

STEP 29
INSTALL INTERIOR COVERS

-Snap on the interior covers at the head, horizontals, and sills.

E9-2731 @ head & horizontals
E9-2293 @ sill

See **Details 71 & 72**.

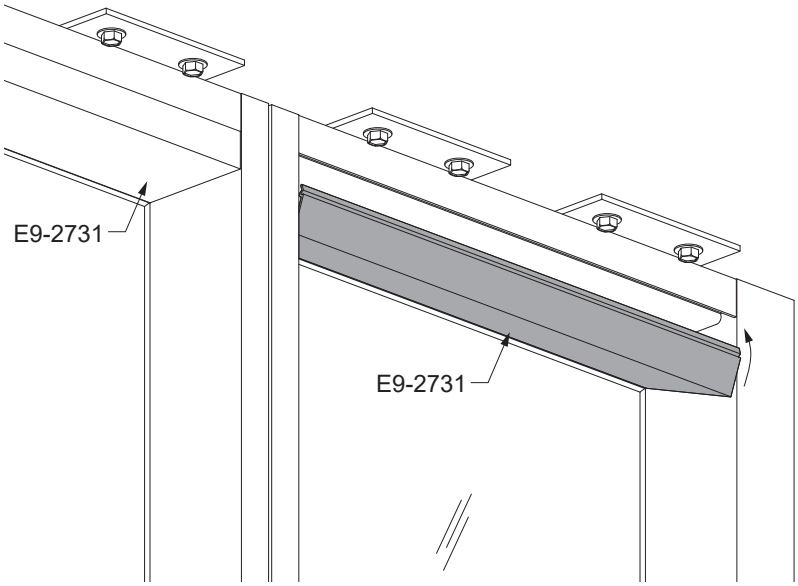

Detail 71

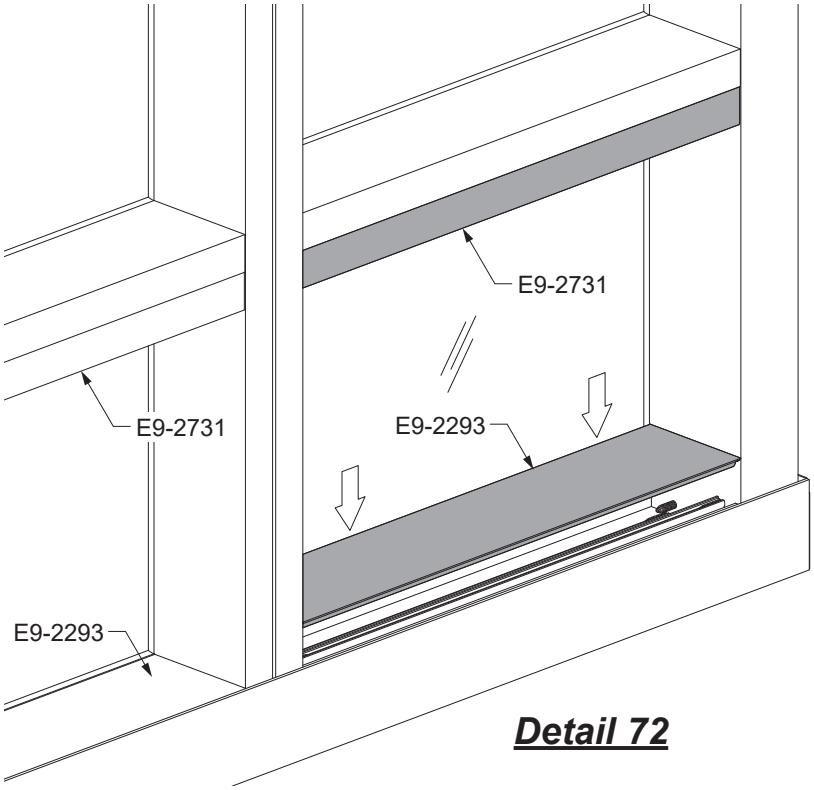

Detail 72

YKK AP America Inc.
101 Marietta Street NW
Suite 2100
Atlanta, Georgia 30303
www.ykkap.com