YHS 50 TU PreGlazed Storefront System

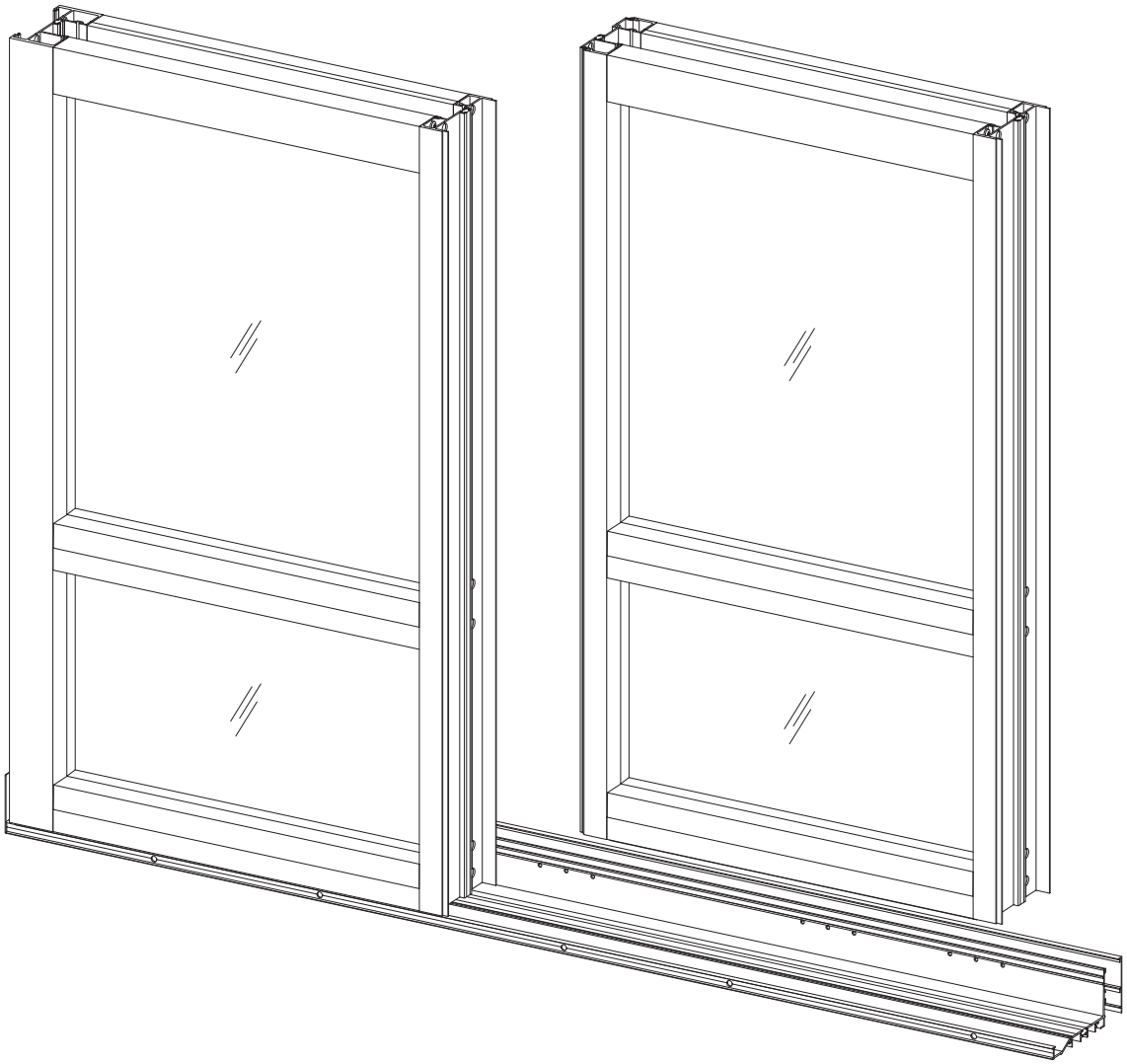

Installation Manual

©2026 YKK AP America Inc.

TABLE OF CONTENTS

Installation Notes ..... Page ii

PARTS DESCRIPTION

YHS 50 TU PreGlazed Framing Members ..... Pages 1 & 2
YHS 50 TU PreGlazed Accessories ..... Pages 3 & 4
YHS 50 TU PreGlazed Fasteners ..... Page 4

FRAME FABRICATION

Determine Frame Dimensions ..... Page 5
Fabricate Sill Flashing ..... Pages 6 to 9
Fabricate Vertical Mullions & Pocket Fillers ..... Pages 10 to 12
Fabricate Head, Horizontal & Sill Members ..... Page 12
Fabricate Glass Stops ..... Page 12

FRAME ASSEMBLY

Install Structural Silicone Spacers ..... Page 13
Assemble Frames ..... Pages 13 to 16
Install Weatherseal ..... Page 17
Install Water Deflectors ..... Page 18
Install Glazing Gasket E2-0088 (For Dry Glazing Only) ..... Page 19
Install Setting / Side / Top Blocks ..... Pages 20 & 21

GLAZING

Install Glass ..... Pages 22 & 23
Install Setting / Anti-Walk Blocks ..... Pages 24 & 25
Install Glass Stops & Glazing Gaskets ..... Pages 26 to 30
Apply Structural Sealant (Outside, Wet Glazing Only) ..... Pages 31 & 32

FRAME INSTALLATION

Install Sill Flashing ..... Pages 33 to 36
Install Sill Flashing at Corners ..... Page 37
Prepare Door Jambs (Dry Glazing Only ..... Page 38
Install Frames ..... Pages 39 to 45
Apply Perimeter Sealant ..... Page 46
Apply Sealant at Corner Mullions ..... Page 47
Install Interior Covers ..... Pages 48 & 49
Seal Air / Water Treshold ..... Page 50

Installation Notes

1. Do not drop, roll or drag boxes of aluminum framing. Move and stack boxes with proper support to prevent distortion. If fork lifts are used be especially careful about striking the boxes when lifting or moving.

2. Store in a dry, out of the way area. If rain exposure, condensation or any water contact is likely, then all packaging material should be removed. Wet packaging materials will discolor and may stain aluminum finishes and paints.

3. All materials should be checked for quality and quantity upon receipt, YKK AP must be notified immediately of any discrepancies in shipment. Check to make sure that you have the required shims, sealants, supplies and tools necessary for the installation.

4. Carefully check the openings and surrounding conditions that will receive your material. Remember, if the construction is not per the construction documents, it is your responsibility to notify the general contractor in writing. Any discrepancies must be brought to the general contractor's attention before you proceed with the installation.

5. Gather your shop drawings, materials, packing list, and this installation manual. Carefully review parts location, the sequence it goes therein, when you glaze it and how you seal it. Installation instructions are of a general nature and may not cover every condition you will encounter. The shop drawings and/or installation manuals were prepared specifically for the product.

6. Any material substitutions must be of equal or greater quality.

7. Make certain that material samples have been sent for compatibility testing for all manufacturer's sealants involved. Only use sealants that are approved by YKK AP and make certain they have been installed in strict accordance with the manufacturer's recommendations and specifications:

8. Remember to isolate, in an approved manner, all aluminum from uncured masonry or other incompatible materials.

9. System-to-structure fasteners are not supplied by YKK AP. Fasteners called out on shop drawings are to indicate minimum sizes for design loading.

10. Entrances are to be installed plumb, square, level and true.

11. If any questions arise concerning YKK AP products or their installation, contact YKK AP for clarification before proceeding.

12. YKK AP storefront and/or curtain wall framing is typically completed before drywall, flooring and other products which may still be in process. Wrap and protect the material when stored at job site.

13. Cutting tolerances are plus zero (0"), minus one thirty second (-1/32") unless otherwise noted.

14. Check our website, www.ykkap.com, for the latest installation manual update prior to commencing work.

FRAMING MEMBERS

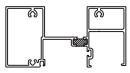	**O.G. Head** 2-1/2” x 5”	**BE9-0631**		**Deep Pocket Filler** Use with AS-0504 & AS-0551	**E9-0656**
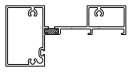	**I.G. Head** 2-1/2” x 5”	**BE9-0636**		**Male Mullion**	**BE9-0634**
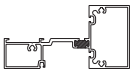	**O.G. Horizontal** 2-1/2” x 5”	**BE9-0683**	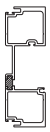	**Female Mullion**	**BE9-0635**
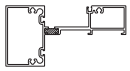	**I.G. Horizontal** 2-1/2” x 5”	**BE9-0638**	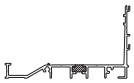	**Sill Flashing**	**BE9-0639**
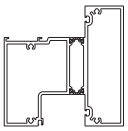	**O.G. Horizontal** 5” x 5”	**BY7-8506 ***		**Flashing Interior Face Cover**	**E9-6342**
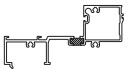	**O.G. Sill** 2-1/2” x 5”	**BE9-0632**	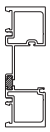	**Corner Mullion**	**BE9-0667**
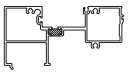	**I.G. Sill** 2-1/2” x 5”	**BE9-0637**		**90° Corner Adaptor (Large)**	**E9-0668**
	Glass Stop	**E9-0658**		**90° Corner Adaptor (Small)**	**E9-0669**
	Snap Cover For I.G. Horizontal	**Y7-9599**		**135° Corner Adaptor (Large)**	**E9-0670**
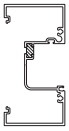	**Jamb** 2-1/2” x 5”	**BE9-0681**		**135° Corner Adaptor (Small)**	**E9-0671**
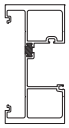	**Heavy Duty Jamb** 2-1/2” x 5”	**BE9-0684**		**Mullion Clip**	**BY7-8507***
	Shallow Pocket Filler Use with BE9-0681	**BE9-0655**	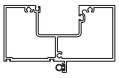	**Transom Bar** Elastomer weathering E2-0051 included	**AS-0517**

* Not Florida Approved

FRAMING MEMBERS (Cont.)

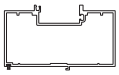	**OHCC Transom Bar** Use with AS-0218 Pile Weathering included	**AS-0521**		**Door Jamb** Elastomer weathering E2-0051 included Use with 35HL/50HL Doors	**AS-0551**
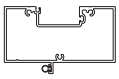	**Transom Bar** Elastomer weathering E2-0051 included Use with 35HL/50HL Doors	**AS-0553**		**Threshold Trim** Elastomer weathering E2-0051 included	**AS-0503**
	Door Stop For OHCC Transom Bar Elastomer Weathering E2-0051 included	**AS-0218**		**Water Resistant Threshold Gutter**	**E9-0502**
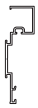	**Transom Glazing Pocket Filler (35H)**	**E9-0515**		**Threshold Ramp**	**E9-0511**
	Transom Glass Stop	**E9-0506**		**Threshold Ramp**	**E9-0512**
	Transom Glazing Pocket Filler (35HL)	**E9-0555**		**Threshold Ramp**	**E9-0513**
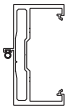	**Door Jamb** Elastomer weathering E2-0051 included	**AS-0504**		**Air Tight Threshold** Elastomer weathering E2-0051 included	**AS-0487**

ACCESSORIES

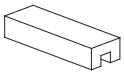	**Setting Block**	**E2-0095**		**Push-in Glazing Gasket** For 1-5/16” Glazing	**E2-0083**
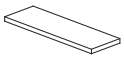	**Side Block**	**E2-0096**		**Preset Glazing Gasket** For dry glazing	**E2-0088**
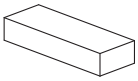	**Side Block** For End Bay	**E2-0075**		**Interior Silicone Spacer** For wet glazing	**E2-0084**
	OHCC Transom Setting Block	**E2-0134**		**Weathering Gasket** Use with BE9-0635 Female Mullion	**E2-0065**
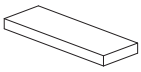	**IG Horizontal / Sill Setting Block**	**E2-9938**		**Elastomer Weathering** Use at corner mullions	**E2-0051**
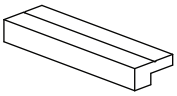	**Top Setting Block** Used with BE9-0631	**E2-0673PC**		**Door & Reglaze Silicone Spacer**	**E2-0085**
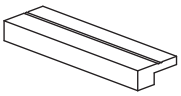	**Top Setting Block** Used with BE9-0683	**E2-0674PC**		**1/4” x 1/4” Spacer**	**E2-0110**
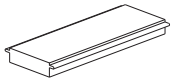	**Setting Block** Used with E2-0674PC	**E2-0363**		**Water Deflector** For Intermediate Horizontals	**E2-0049**
	Setting Block For 35H/50H Doors w/ Monolithic Glass	**E2-0086**		**Anti-Walk Block** For Female Mullion (Dry Glazed)	**E2-0546**
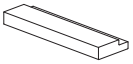	**Setting Block** For 35H/50H Doors w/ Insulating Glass	**E2-0063**		**Anti-Walk Block** For Jamb & Vertical Deep Pockets (Dry Glazed)	**E2-0807**
	Push-in Glazing Gasket (1/8” F.C.)	**E2-0078**	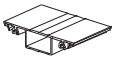	**Anchor Filler** For Door Jamb at Anchor Locations, 2-1/2” Long	**E1-1068**
	Push-in Glazing Gasket (7/16” F.C.) Not Florida Approved	**E2-0081**	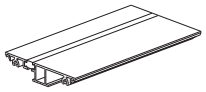	**Anchor Filler** For Head & Sill at Anchor Locations, 9” Long	**E1-1060**

ACCESSORIES (Continued)

	PVC Flat Filler	**E3-0043**	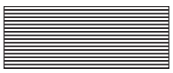	**Splice Sleeve** For Sill Flashing BE9-0639	**E2-0070**
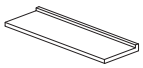	**Panel Spacer**	**E3-0044**		**“This Side Down” Label**	**E4-0008**
	Glazing Pocket Filler	**E3-0045**	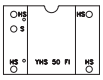	**Drill Fixture** For Head / Sill	**H-7203-1**
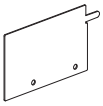	**End Dam** For Sill Flashing BE9-0639	**E1-0601**	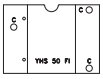	**Drill Fixture** For Horizontal	**H-7203-2**

FASTENERS

	#10 x 1/4” FHMS, Zinc Plated Steel, For attachment of Threshold Clip E1-1056 to Door Jamb	**FM-1004**		**#10 x 1/2” PHSMS** Type “AB”, Stainless Steel For attachment of Sill to Sill Flashing	**PC-1008 -SS**
	#10 x 1/2” FHSMS Zinc Plated Steel, For attachment of Threshold Trim	**FC-1008**		**#12 x 1” PHSMS** Type “AB”, Zinc Plated Steel, For Door Framing Screw Spline attachment	**PC-1216**
	#10 x 1” PHSMS Type AB Zinc Plated Steel, For Attachment of E9-0656 to Door Jamb	**FC-1016**		**#12 x 1-1/4” PHSMS** Type “AB”, Zinc Plated Steel, For Standard Framing Screw Spline attachment	**PC-1220**
	#10-24 x 1/2” UCFH Type F, Stainless Steel For Attachment of E9-0656 into Steel Reinforcing	**FF-1008 -SS**		**#14 x 1/2” PHSMS** Type “AB”, Zinc Plated Steel, For Threshold Gutter attachment	**PC-1408**
	#12 x 3/4” UFHSMS Type A, Zinc Plated Steel, For End Dam Attachment	**UA-1212**		**#10-24 x 3/8” PHSS** Stainless Steel, For Corner Adaptor Attachment	**PM-1006-SS**
	#10 x 5/8” PHSMS Type “B”, Zinc Plated Steel For attachment of Transom Glazing Pocket Filler	**PB-1010**	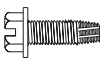	**1/4” – 20 x 3/4” HWHMS** Type “F”, Zinc Plated Steel For attachment of Steel Reinforcing to Verticals	**HF-2512 -W1**

FRAME FABRICATION

STEP 1
DETERMINE FRAME SIZE

Determine Frame Width:

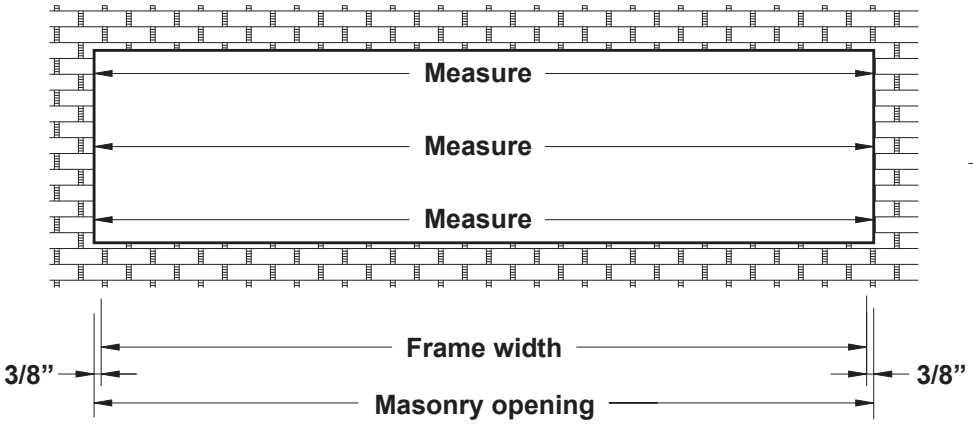

Note: Check the opening for squareness and plumb at both ends; unit must be installed in a true rectangle.

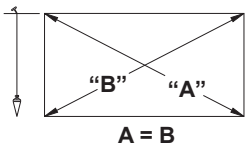

Detail 1

-Measure the width of the masonry opening at the top, middle and bottom.
-Select the smallest dimension measured and subtract 3/4” to determine the frame width size to be used.
See **Detail 1**.

Determine Frame Height:

Detail 2

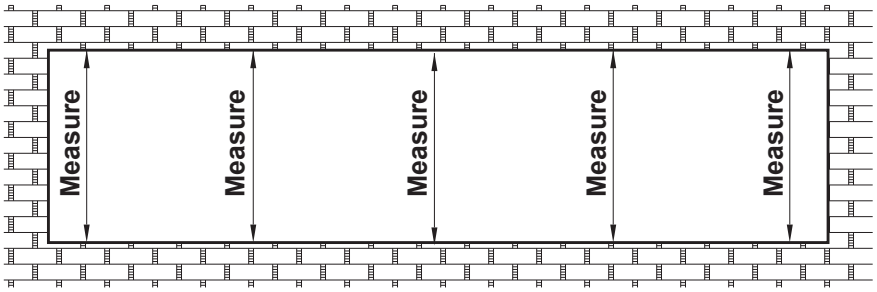

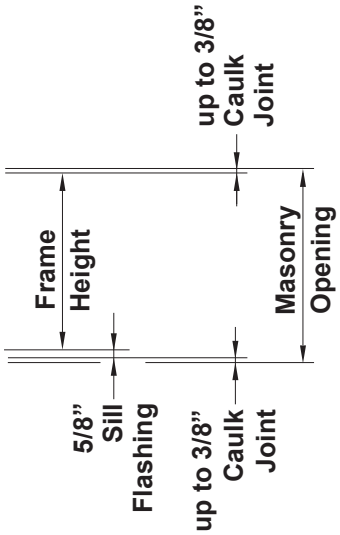

-Measure the height of the masonry opening at several points along the entire length of the opening.
-Select the smallest dimension measured and subtract 1-3/8” to determine the frame height:
- up to 3/8” for the caulk joint at the head.
- 5/8” for the sill flashing BE9-0639.
- up to 3/8” for the caulk joint under the sill flashing (excluding FPA-HVHZ applications).

See **Detail 2**.

Note: Refer to current FPA-HVHZ for anchoring guidelines.

FRAME FABRICATION

STEP 2
FABRICATE SILL FLASHING

-Cut sill flashing, BE9-0639, to the frame width width dimension determined in **Step 1** plus(+) 1/2”. When using air tight threshold, E9-0487, sill flashing terminates at the door jamb.
-For openings longer than 24’-0”, the sill flashing must be spliced every twelve to fifteen feet. Allow a 3/8” splice joint between members; see **Detail 36 on Page 34.** Splice is to be located at the center of the daylight opening between verticals.
-Locate and mark the centerline of each vertical on the sill flashing.
See **Detail 3**.

D.L.O. = Day Light Opening

D.O.W. = Door Opening Width

S.F. = Frame Width + 1/4” @ Each Jamb

Entrance Door with Water Resistant Threshold, E9-0502

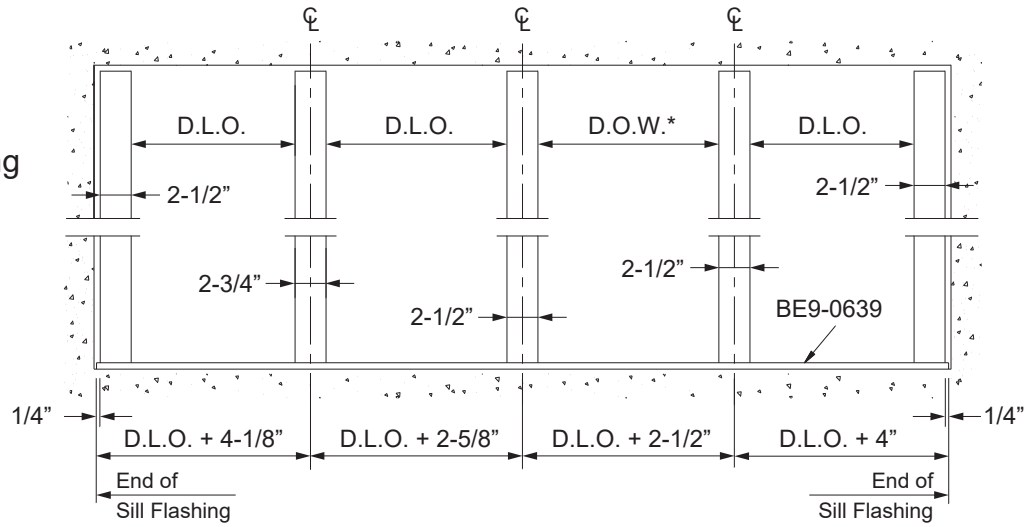

Detail 3

Entrance Door with Air Tight Threshold, AS-0487

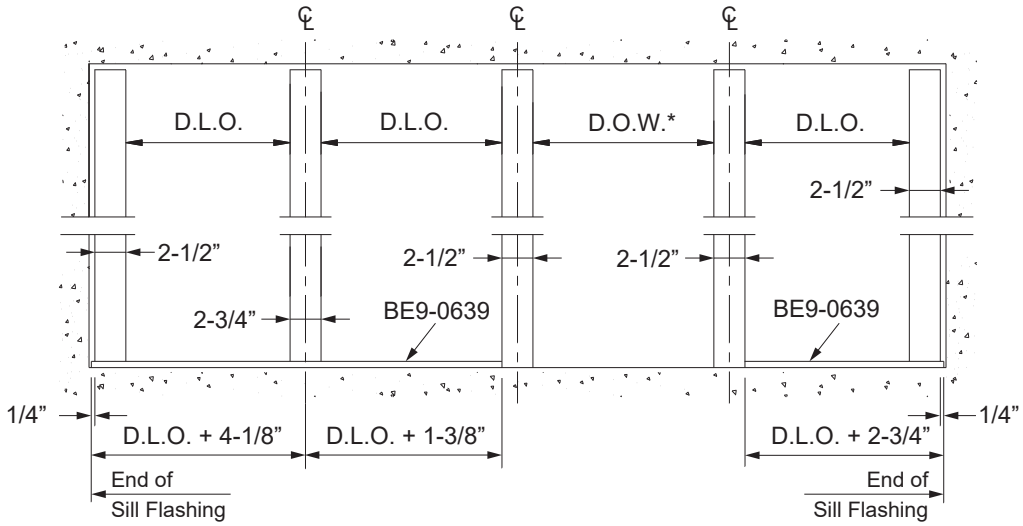

***Note:** The sill flashing, BE9-0639, does not run underneath the door frame when the air tight threshold, AS-0487, is used.

FRAME FABRICATION

STEP 2
FABRICATE SILL FLASHING (Continued)

-Locate and drill clearance holes in sill flashing for perimeter anchors. Hole quantities, size, and location will vary per design requirements. Refer to the approved shop drawings and/or Florida Product Approvals for appropriate anchor fastener locations, or consult a qualified engineer or YKK AP.
-Drill 5/16” dia. clearance holes for 1/4” fasteners or 3/8” dia. clearance holes for 5/16” fasteners. See **Detail 4** for anchor hole locations.

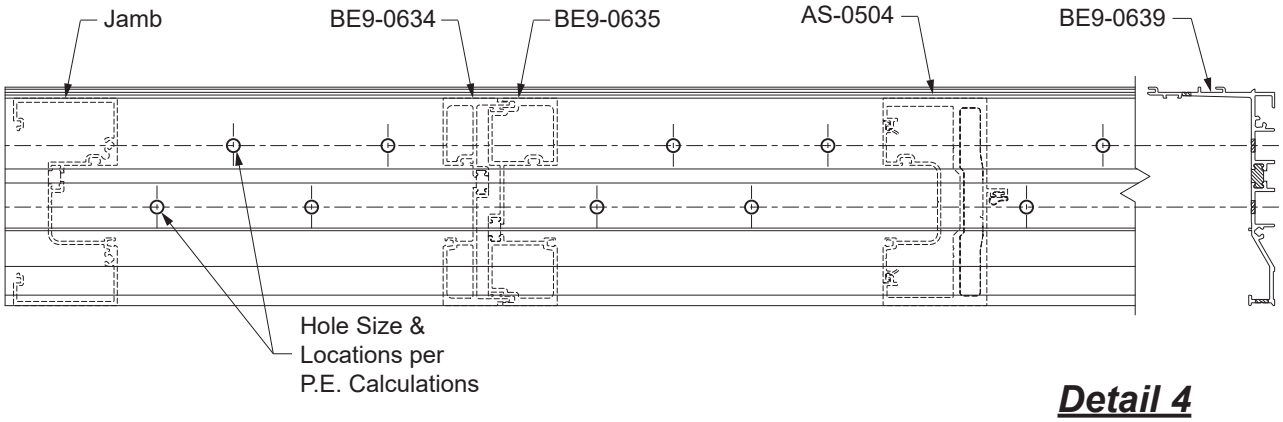

Detail 4

Fabricate weep holes in the sill flashing:
-Measure 8” in each direction of the vertical centerline and mark on the front face of the sill flashing the location for the weep holes.
-Drill a 3/8” (#V) diameter hole through the front wall of the sill flashing at each location marked.
-Fabricate Ø0.213” clear holes for the sill flashing attachment to the sill member.
See **Detail 5** on this page and **Detail 5A** on the next page.

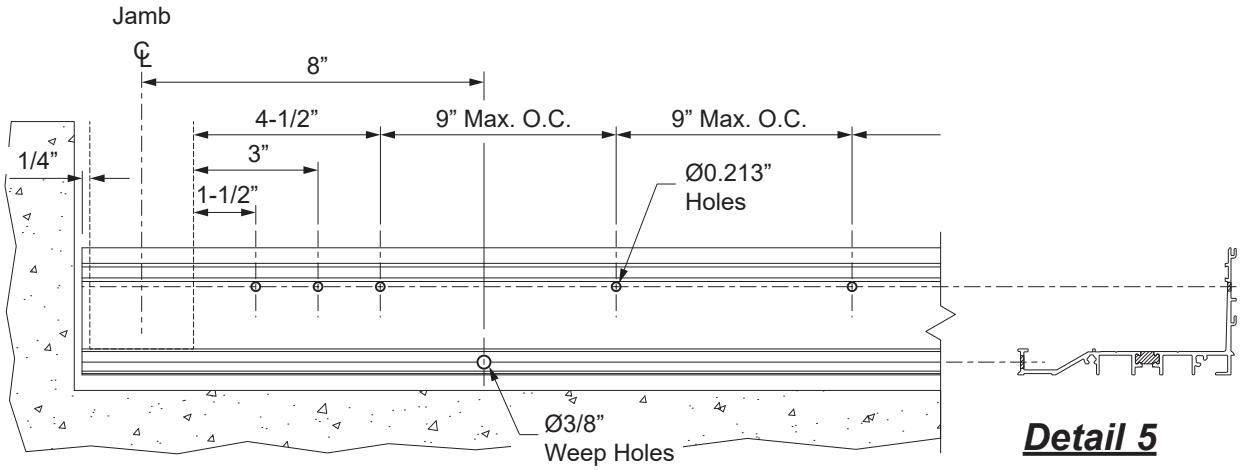

Detail 5

FRAME FABRICATION

STEP 2
FABRICATE SILL FLASHING (Continued)

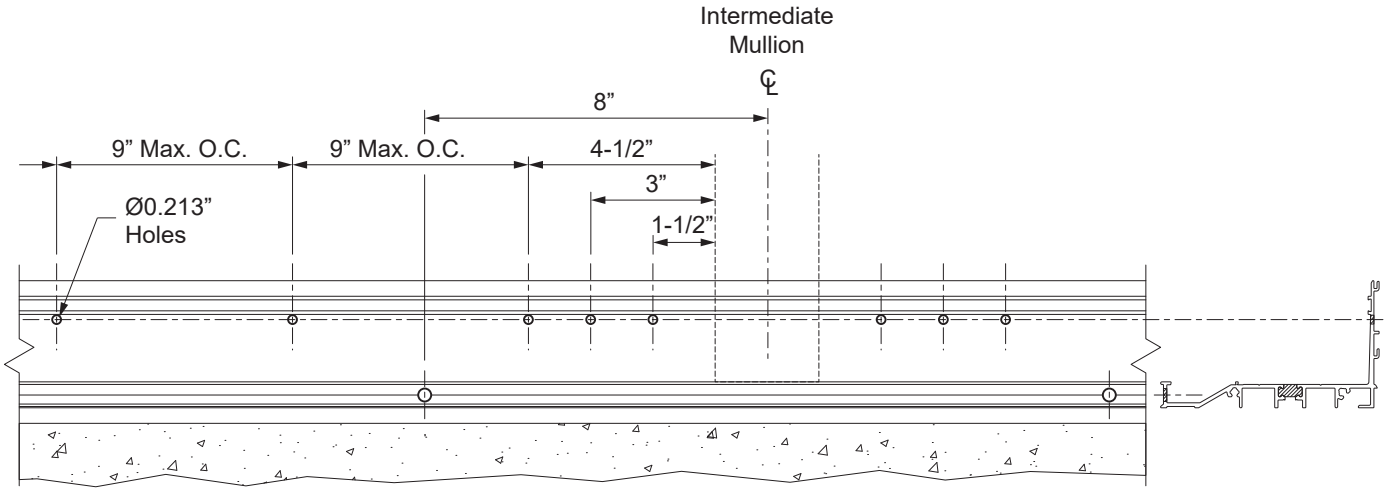

Detail 5A

Where the air-tight door threshold is utilized, the BE9-0639 sill flashing terminates at the door jambs as shown in **Detail 6**.

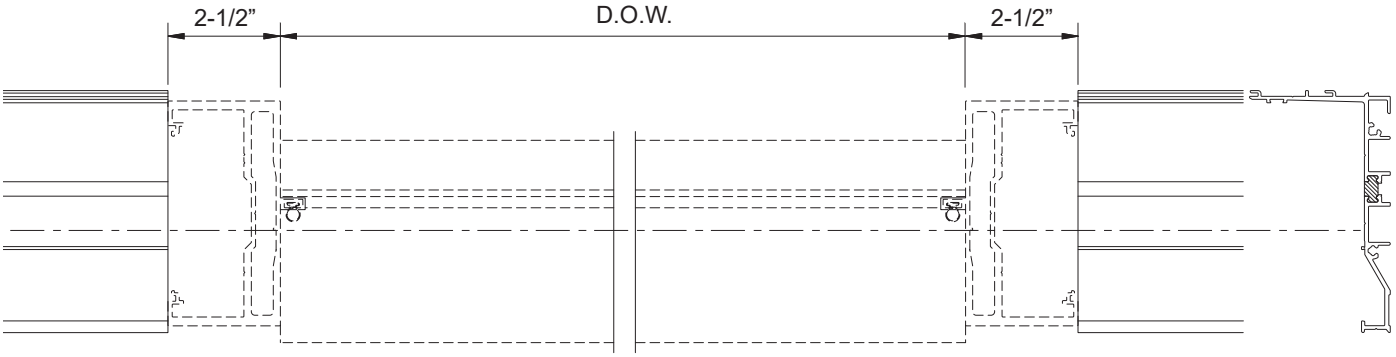

Detail 6

FRAME FABRICATION

STEP 2
FABRICATE SILL FLASHING (Continued)

Where the air-and-water threshold is utilized, the BE9-0639 sill flashing runs through and is notched and fabricated as shown in **Detail 6A**.

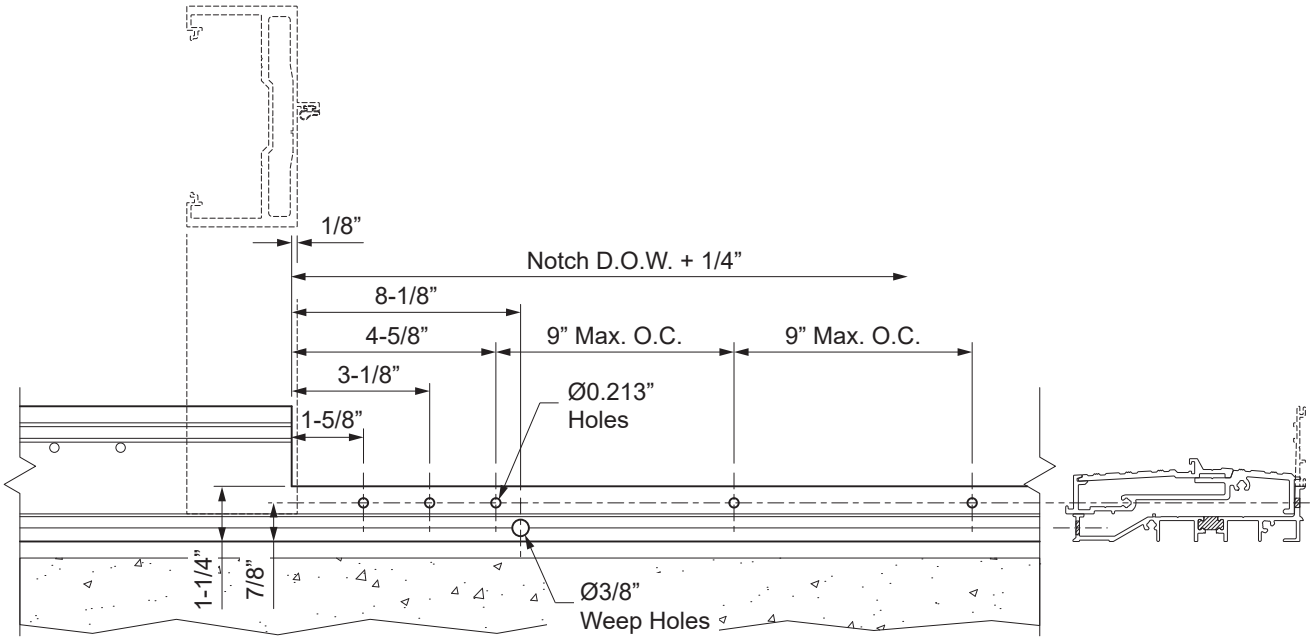

Detail 6A

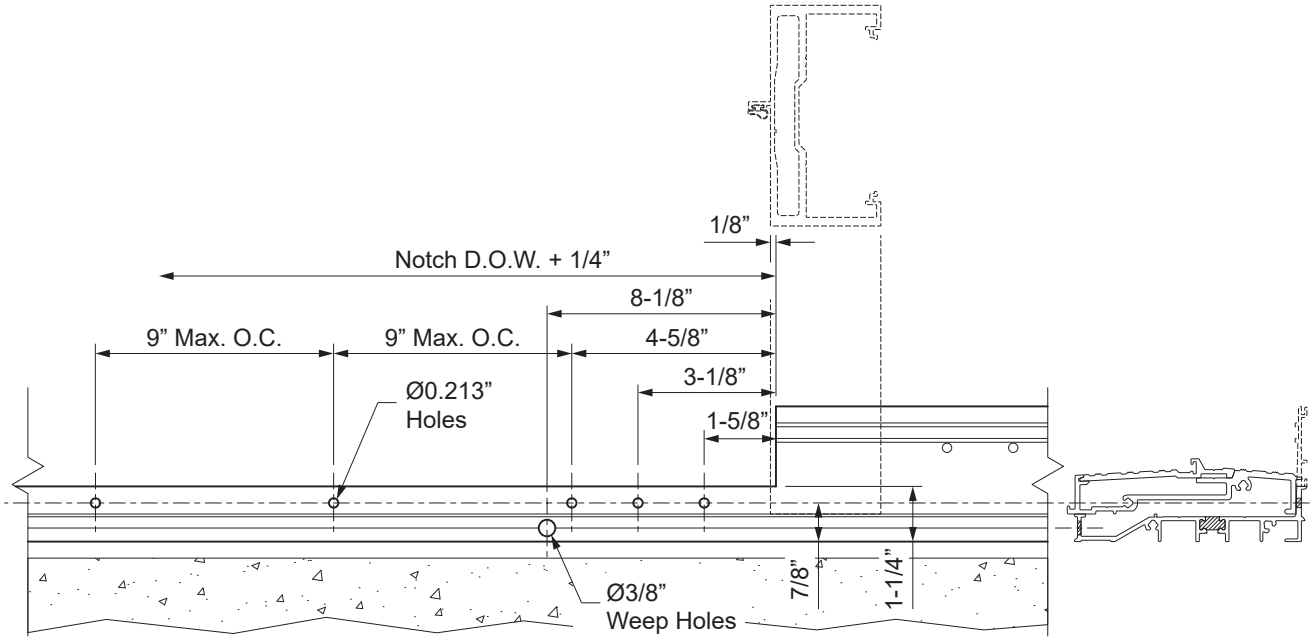

FRAME FABRICATION

STEP 3
FABRICATE VERTICAL MULLIONS AND POCKET FILLERS

-Cut all vertical members, shallow pocket fillers, and corner adaptors to the frame height determined in **Step 1**.

Prepare verticals and shallow pocket fillers for attachment of horizontal members and anchor fillers:

-Using a short piece of each horizontal member as a template, center horizontal members on the face of verticals and mark each hole location. Also, drill fixtures can be used H-7203-1 for head and sill and H-7203-2 for horizontal, drilling indicated holes only.

-Hole locations may also be determined by laying out locations along the face of verticals as shown below in **Detail 7** (**Detail 8** for Inside Glazing.)

-Drill 0.238” diameter (#B drill bit) holes at each location marked.

Note: For vertical members, BE9-0634, BE9-0635, BE9-0667, BE-0681, BE9-0684, AS-0504, and AS-0551; drill through both the web and front face of the mullion. It is also necessary to turn the mullion over and drill 1/2” dia. access holes through the <u>mullion web only</u>, centered on the first holes drilled, to allow the screw heads to pass through.

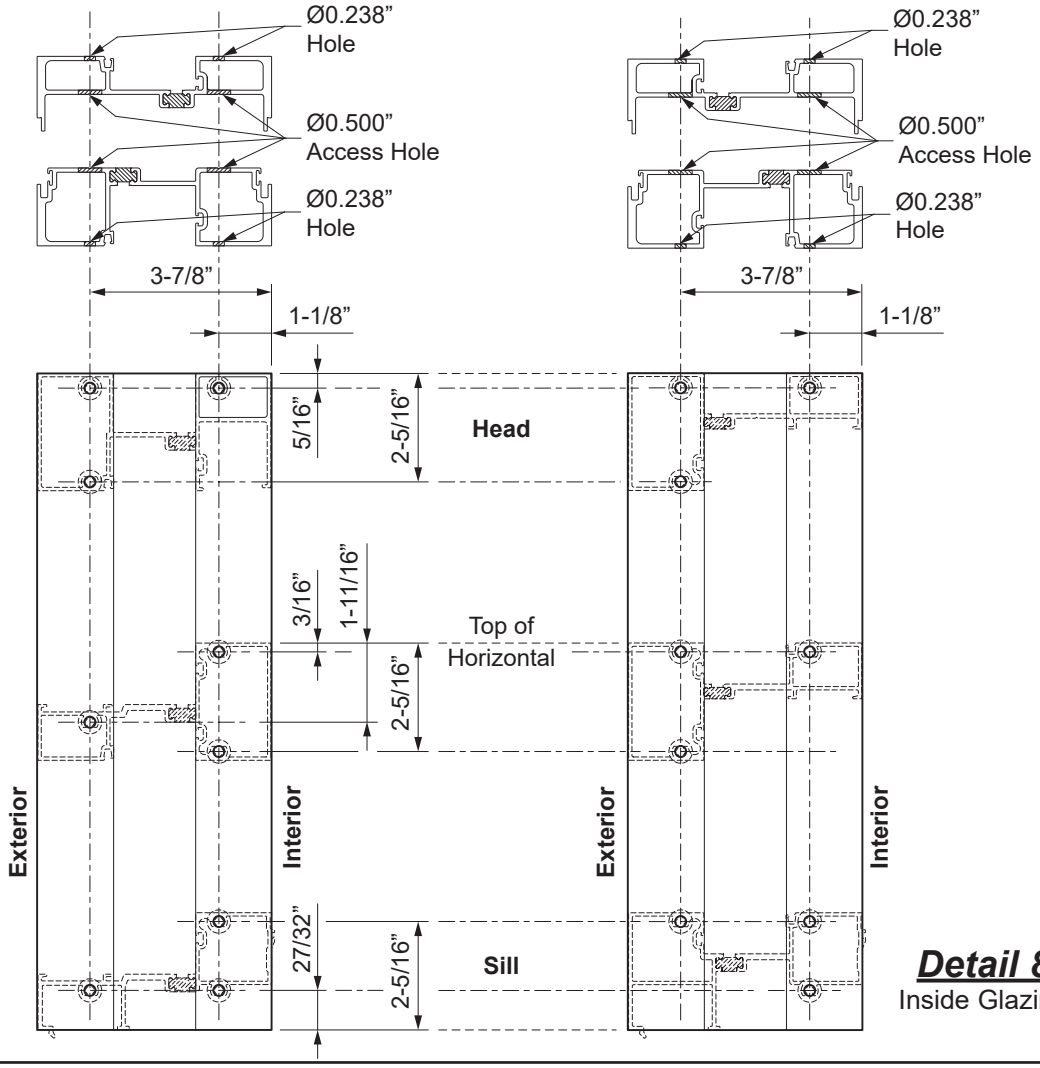

Detail 7
Outside Glazing

Detail 8
Inside Glazing

FRAME FABRICATION

STEP 3
FABRICATE VERTICAL MULLIONS AND POCKET FILLERS

-The units adjacent to the door jamb are required to be field glazed and require the use of E9-0656 deep pocket filler to be fastened into the door jambs.
-The deep pocket fillers are cut and fabricated similar to the shallow pocket fillers, except they also require 0.213” diameter holes (#3 drill bit) drilled in the V-groove of the glazing pocket, 6” from each end and at 9” maximum on center. Countersink for #10 flat head fasteners.

Note: Coordinate with the location of the horizontals so that the horizontals do not block these holes.

See **Detail 9**.

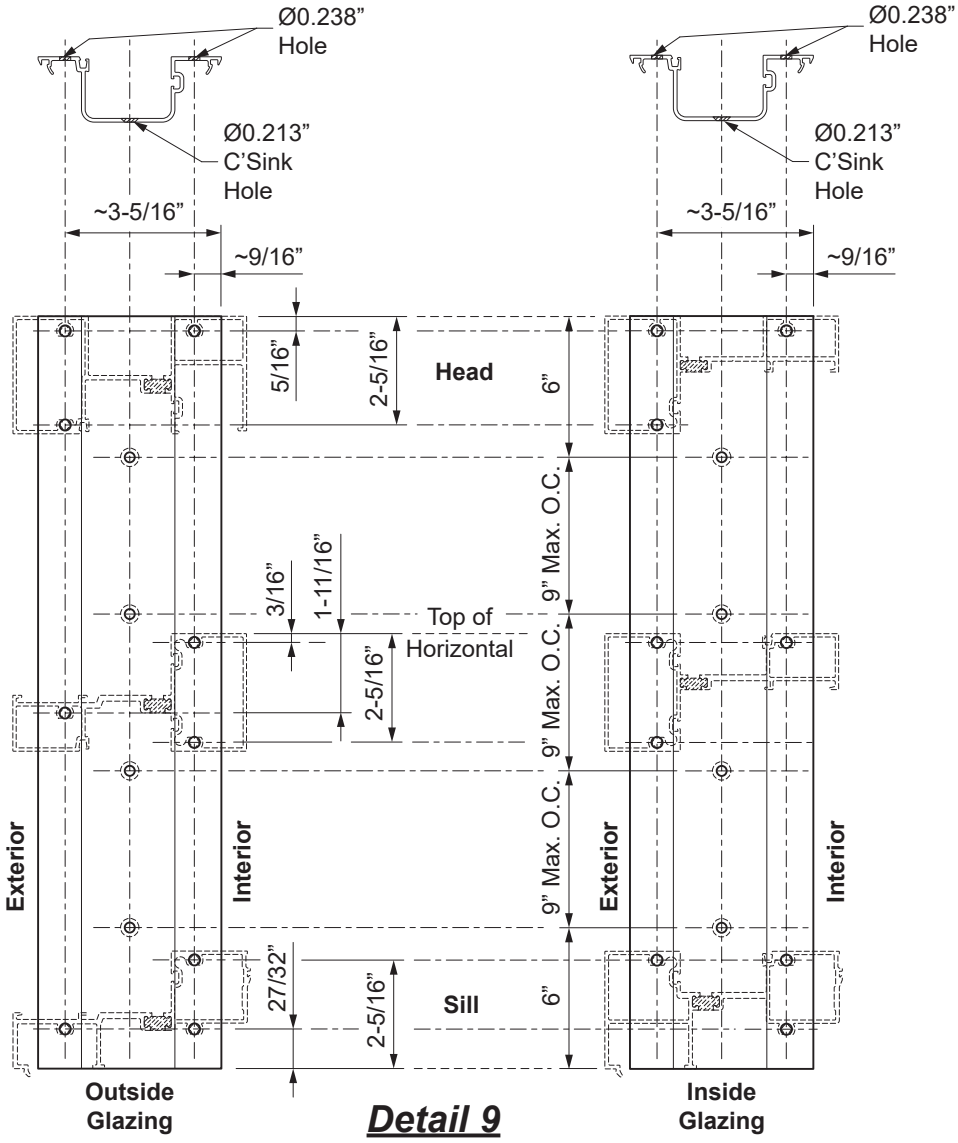

Detail 9

FRAME FABRICATION

STEP 3 (Continued)
FABRICATE VERTICAL MULLIONS AND POCKET FILLERS

-Drill Ø0.213” clear holes into the V-groove on the corner adaptors as shown on **Detail 10.**

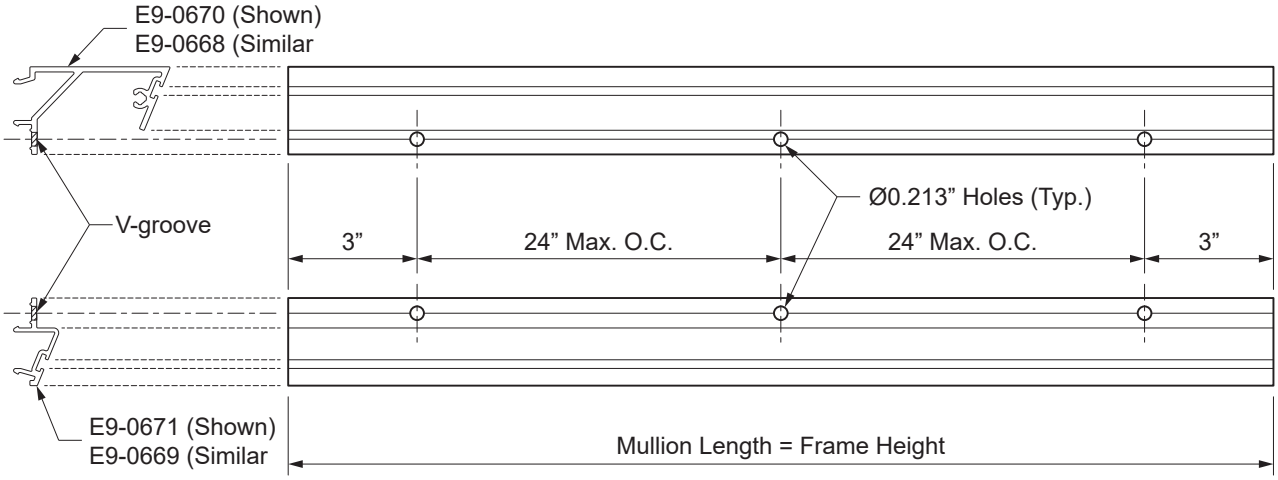

Detail 10

STEP 4
FABRICATE HEAD, HORIZONTAL & SILL MEMBERS

-Cut head, horizontal and sill members to daylight opening between verticals.

Drill the head members for anchor fasteners as shown below in **Detail 11**.

* Refer to the approved shop drawings or Florida Product Approvals for appropriate anchor fastener locations, or consult a qualified engineer or YKK AP.

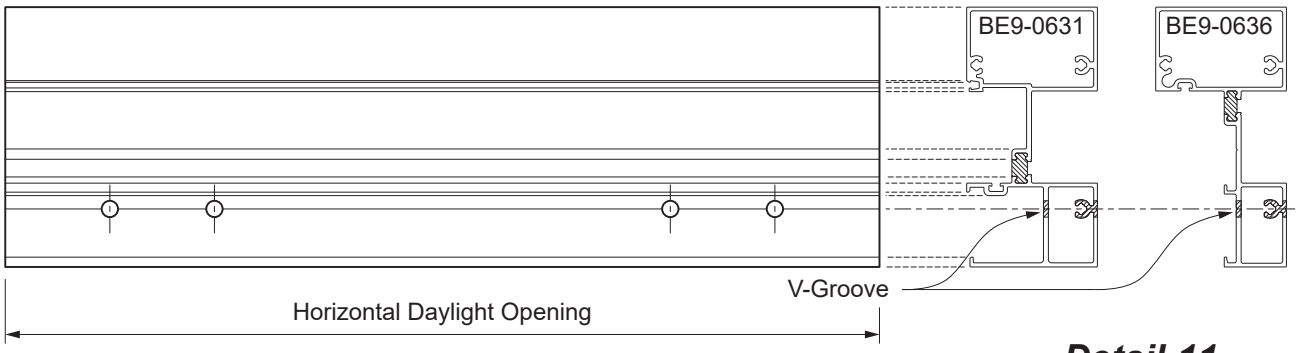

Detail 11

STEP 5
FABRICATE GLASS STOPS

-Cut glass stops to daylight opening between verticals minus(–) 1/32”.

FRAME ASSEMBLY

STEP 6
INSTALL STRUCTURAL SILICONE SPACERS
(For Wet Glazed Impact Applications Only)

-Install all structural silicone spacers, E2-0084, in all horizontals and verticals **prior** to frame assembly.
-Horizontal silicone spacers are to be cut to D.L.O. plus(+) 7/8” and must be notched as shown in **Detail 12**.
-Vertical silicone spacers are to be cut to the full length of the vertical mullion and are not notched.

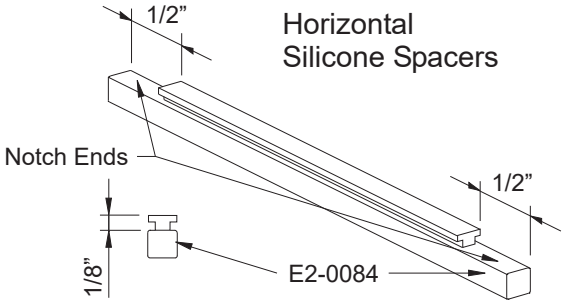

Detail 12
Wet Glazing Only

Caution: Be careful not to stretch silicone spacers when installing.

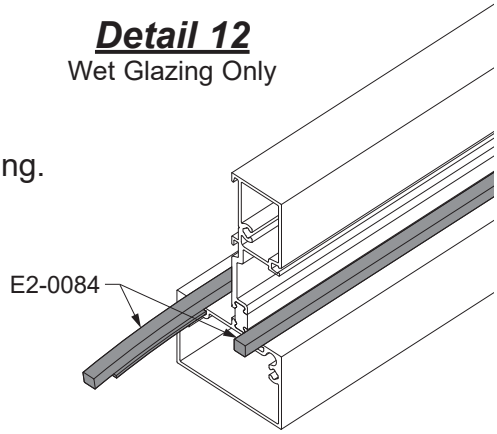

STEP 7
ASSEMBLE FRAMES

-Clean all joints with isopropyl alcohol and wipe clean with white lint free cotton cloth using the two cloth method.
-Apply sealant to each end of head, horizontal and sill members prior to attaching to vertical.

See **Detail 13.**

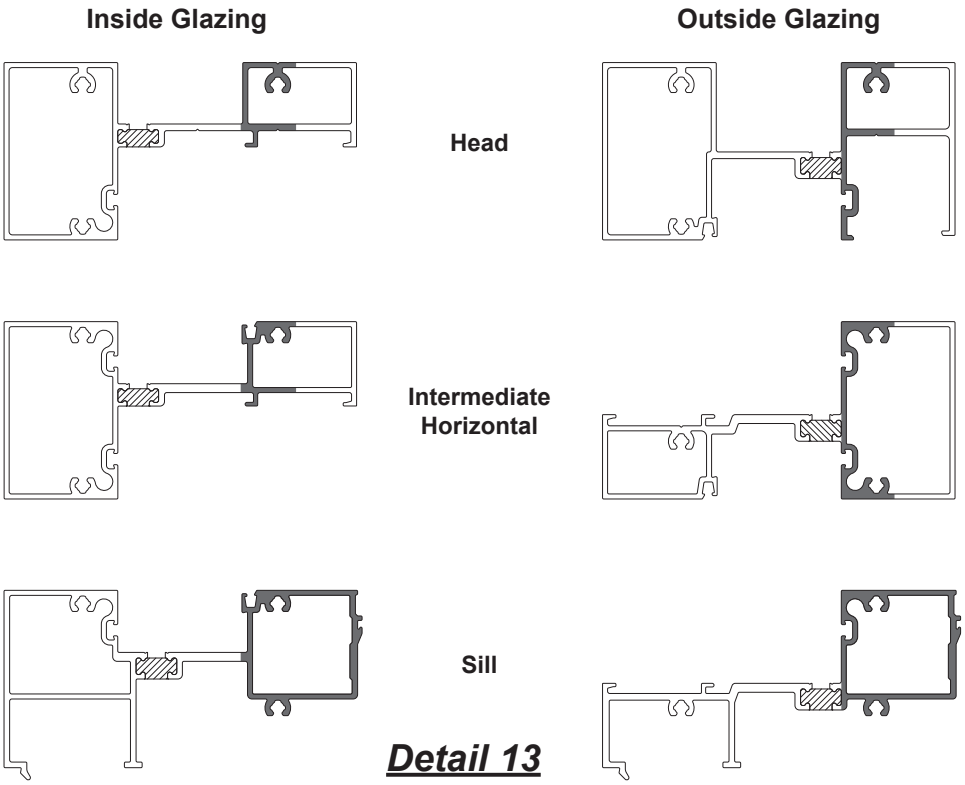

Detail 13

Note: In all metal to metal applications use approved sealants only.

FRAME ASSEMBLY

STEP 7 (Continued)
ASSEMBLE FRAMES

-Attach head, horizontal, sill members to the first vertical mullion using PC-1220 fasteners as shown in **Detail 14**.

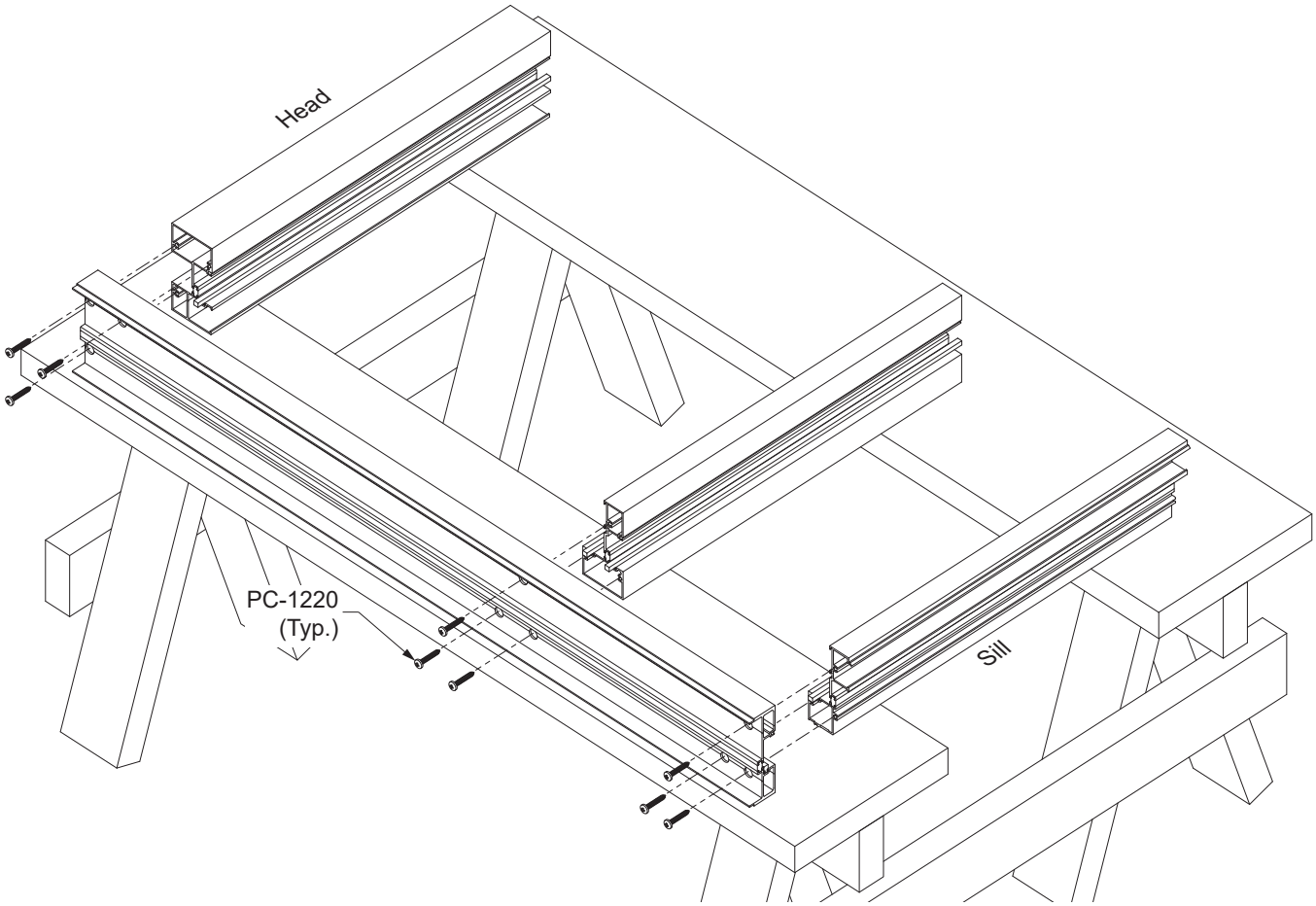

Detail 14
Outside Glazing Shown,
Inside Glazing Similar

FRAME ASSEMBLY

STEP 7 (Continued)
ASSEMBLE FRAMES

-Attach head, horizontal, sill members to the second vertical mullion using PC-1220 fasteners as shown in **Detail 15**.

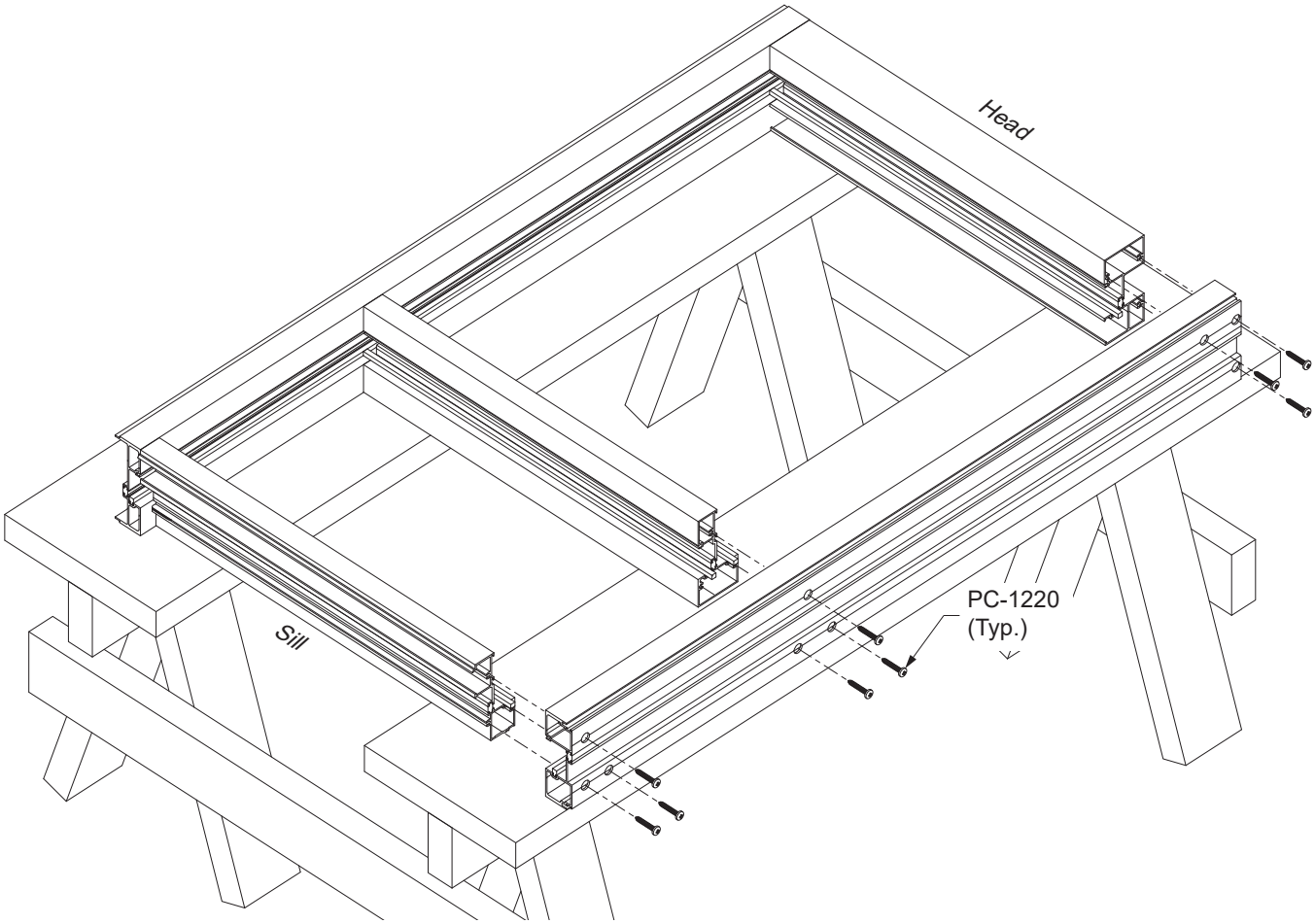

Detail 15
Outside Glazing Shown,
Inside Glazing Similar

FRAME ASSEMBLY

STEP 7 (Continued)
ASSEMBLE FRAME -- CORNER MULLION

-Apply sealant to the interior snap interface of the interior corner cover, 6” up from the bottom of the mullion. Snap the cover pieces onto the corner mullion half. Fasten with PM-1006-SS fasteners at the holes previously drilled in fabrication.
-The exterior corner covers will require E2-0051 bulb gaskets cut to the length of the mullion. Apply dabs of sealant to the bottom of the bulb gasket to adhere it to the cover so that it will not slide out during unit installation. Do not overseal. Insert the gasket into the reglet at the cover.

See **Detail 16**.

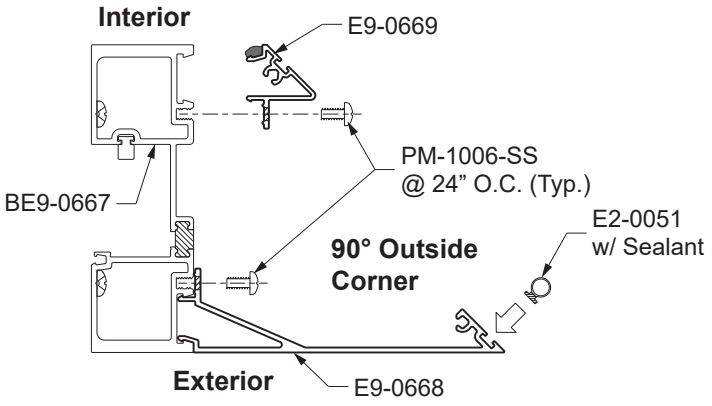

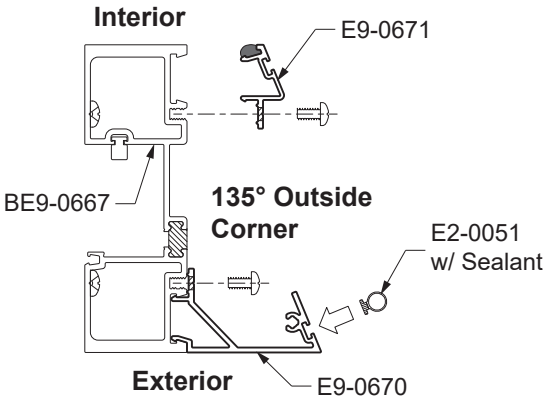

Detail 16

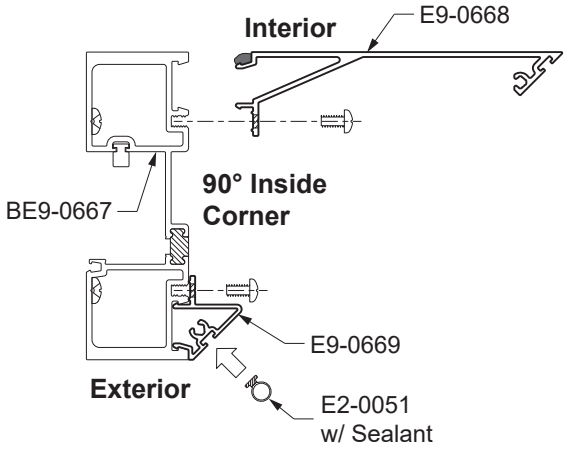

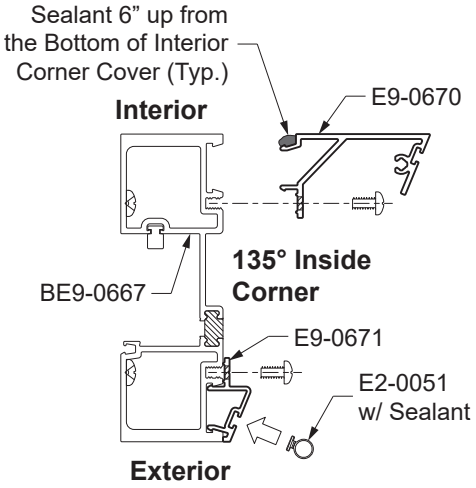

FRAME ASSEMBLY

STEP 8
INSTALL WEATHER SEAL

Weather seal gaskets (E2-0065) are installed in the female mullion only.

-Cut the weather seal gasket to length of the vertical plus (+) 3”, and install into the reglets of the female mullion in the proper orientation as shown in **Detail 17**.
-Apply dabs of sealant to the bottom of the weather seal gasket to adhere it to the mullion so that it will not slide out during unit installation. Do not overseal. Too much silicone will deter mullion engagement.
-Trim the gasket after shrinkage.

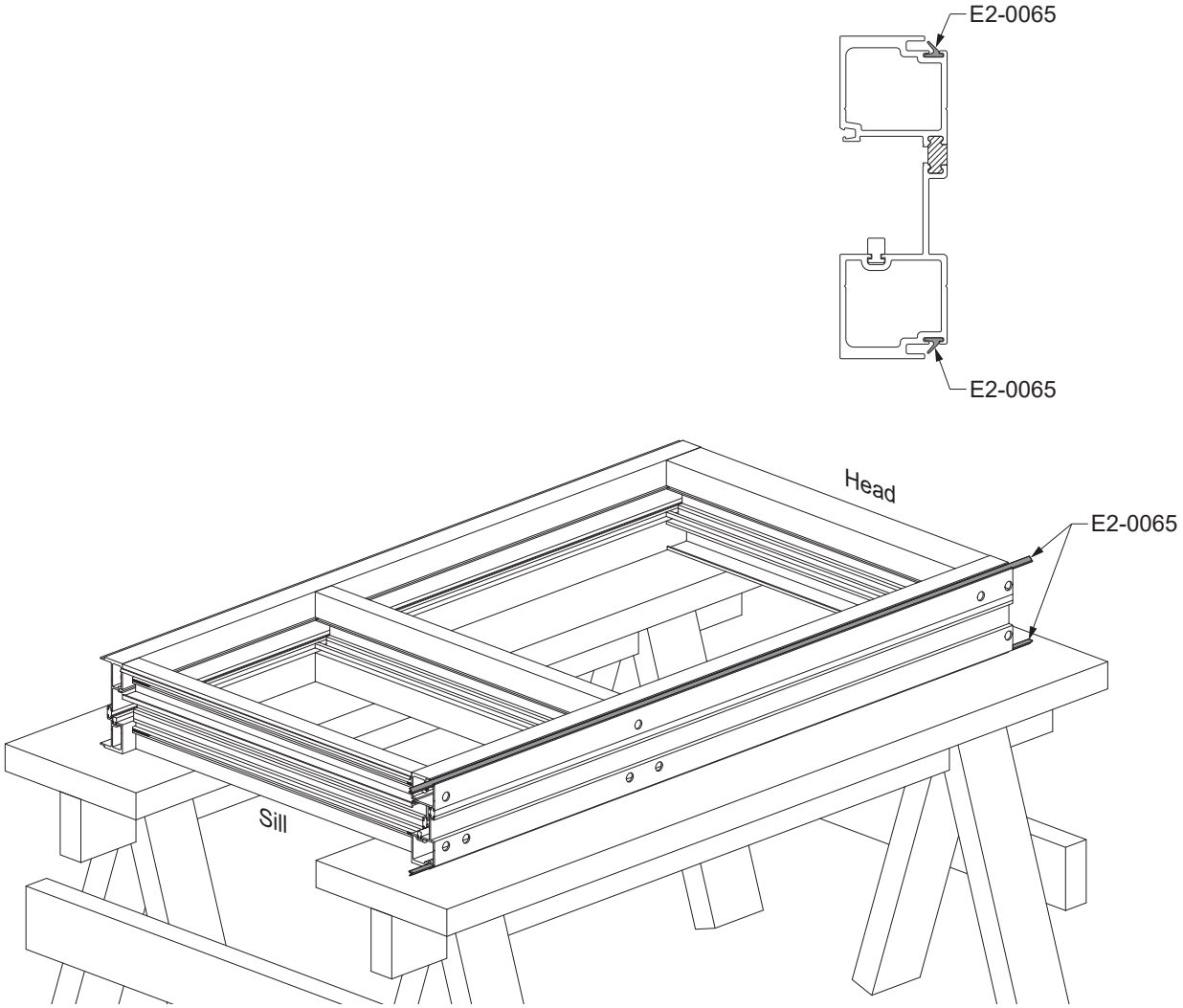

Detail 17
Outside Glazing Shown,
Inside Glazing SImilar

FRAME ASSEMBLY

STEP 9
INSTALL WATER DEFLECTORS

YHS 50 TU PreGlazed Storefront requires the installation of a water deflector, E2-0049, at the ends of every intermediate horizontal to keep water off of the insulating glass units.

Prior to water deflector installation, ensure the horizontal is clean and dry.

-Peel away the protective paper from the bottom of the water deflector, E2-0049, and install the water deflector at the ends of each horizontal. Position the vertical leg of the water deflector against the end of the horizontal. Seal around the water deflector as shown in **Detail 18A**.

Note: For Wet Glazing applications, it may be necessary to notch the ramp of the water deflector around the vertical spacer. Ensure the water deflector is sealed to the spacer.

See **Detail 18**.

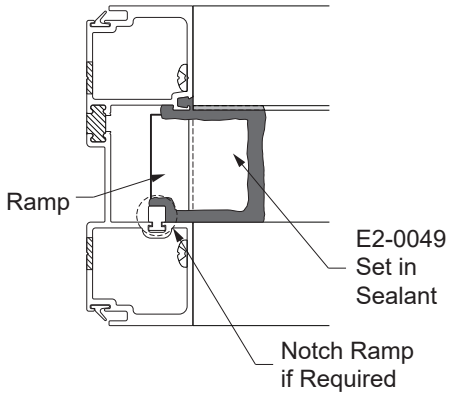

Detail 18A
Wet Glazing Only

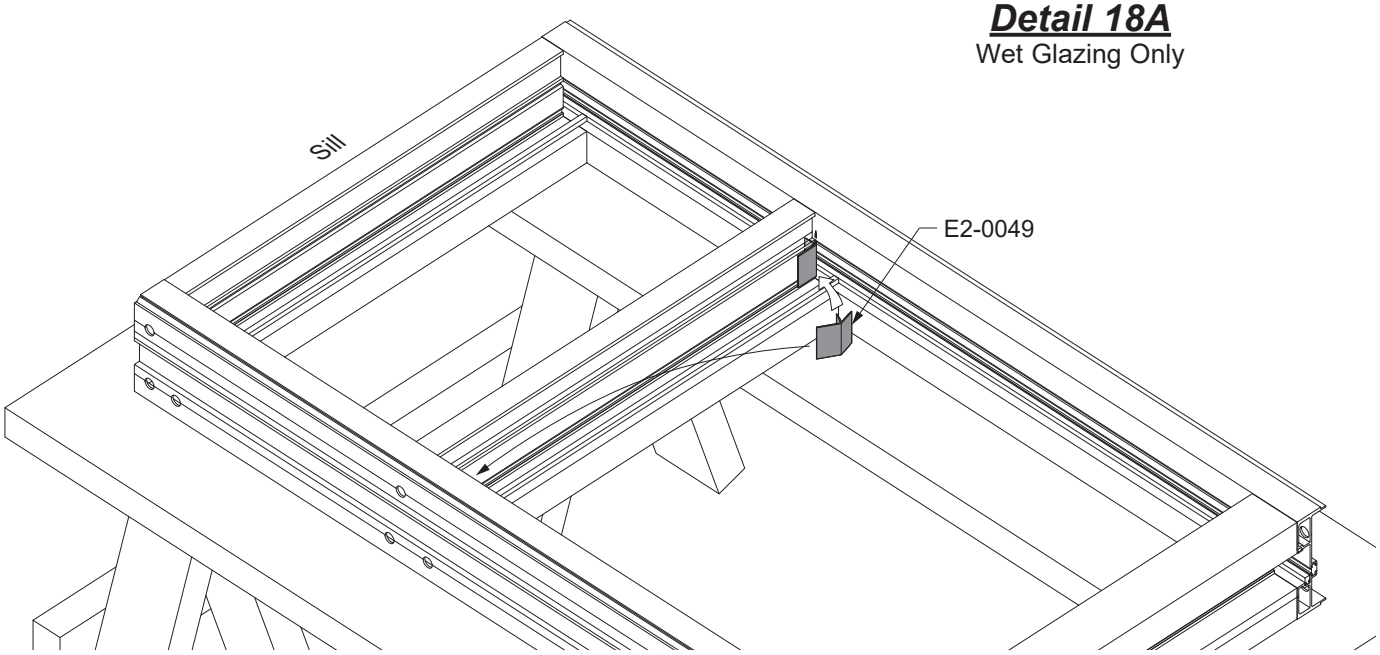

Detail 18
Outside Glazing Shown,
Inside Glazing SImilar

FRAME ASSEMBLY

STEP 10
INSTALL GLAZING GASKET E2-0088 (FOR DRY GLAZING ONLY)

-Cut horizontal glazing gasket, E2-0088, to daylight opening plus(+) 3/16” for each foot of length.
-Cut vertical glazing gasket, E2-0088, to daylight opening plus(+) 1-1/4” plus(+) 3/16” for each foot of length.
-Using a small brush, clean out any dirt or debris that may have accumulated in the gasket reglets.
-Apply sealant into reglet 2” each direction at all corners.
-Install the vertical gaskets first. Insert the ends and middle of the gasket first, then push in the remainder of the gasket working from the middle towards the ends.

-Install the horizontal gaskets next. Apply sealant to the gasket ends to seal the horizontal gasket to the vertical gasket.
-Tool excess sealant at the gasket corners to ensure a watertight seal.

See **Details 19 & 19A**.

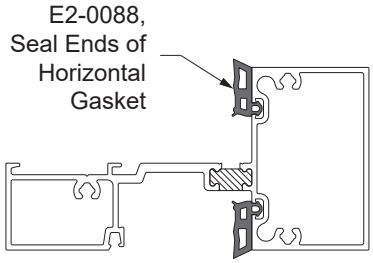

Detail 19A
Inside Glazing Shown,
Outside Glazing SImilar

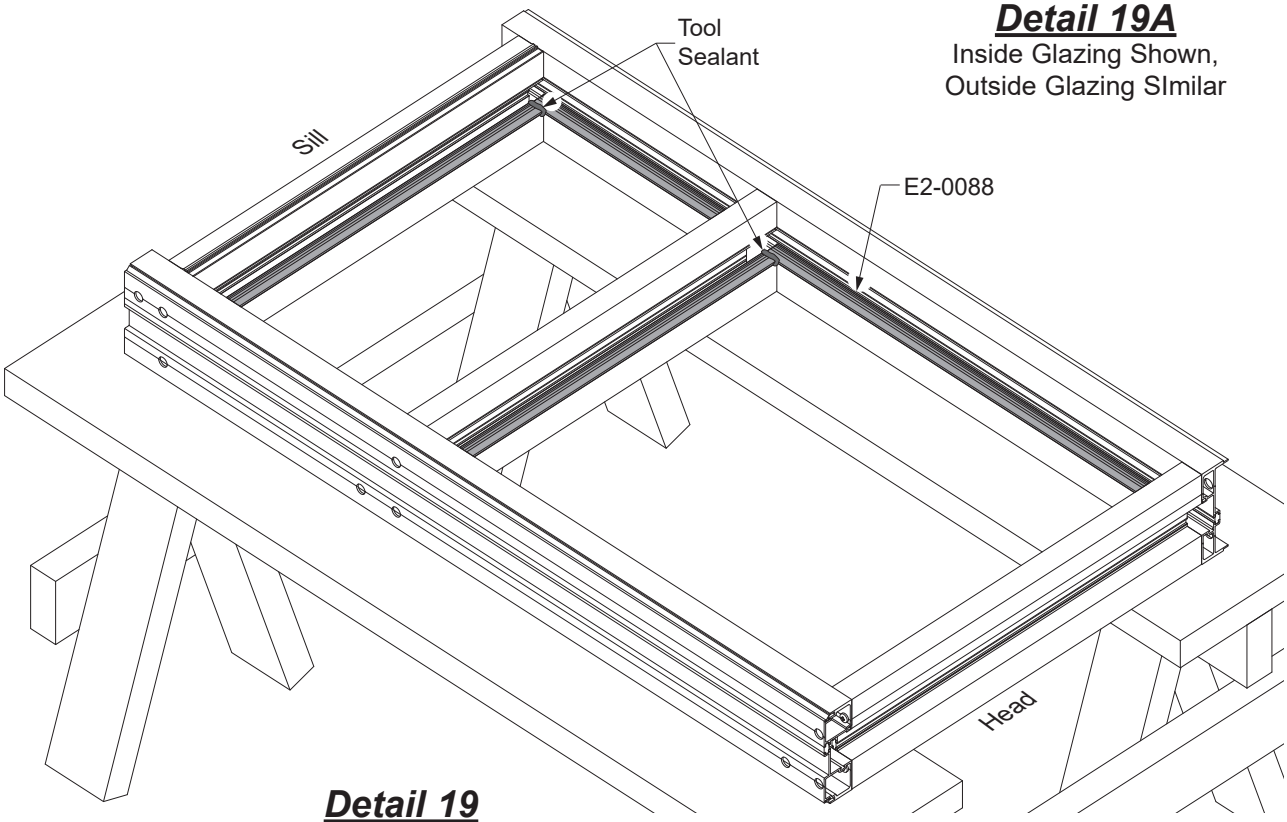

Detail 19
Inside Glazing Shown,
Outside Glazing SImilar

FRAME ASSEMBLY

STEP 11
INSTALL TOP AND SIDE BLOCKS (OUTSIDE GLAZING)

-Adhere E2-0673PC top blocks with sealant into the glazing pockets at the underside at the ends of the head and intermediate horizontals as shown in **Detail 20**.

-Apply E2-0096 side blocks into the glazing pockets of every male mullion (shallow pocket.)

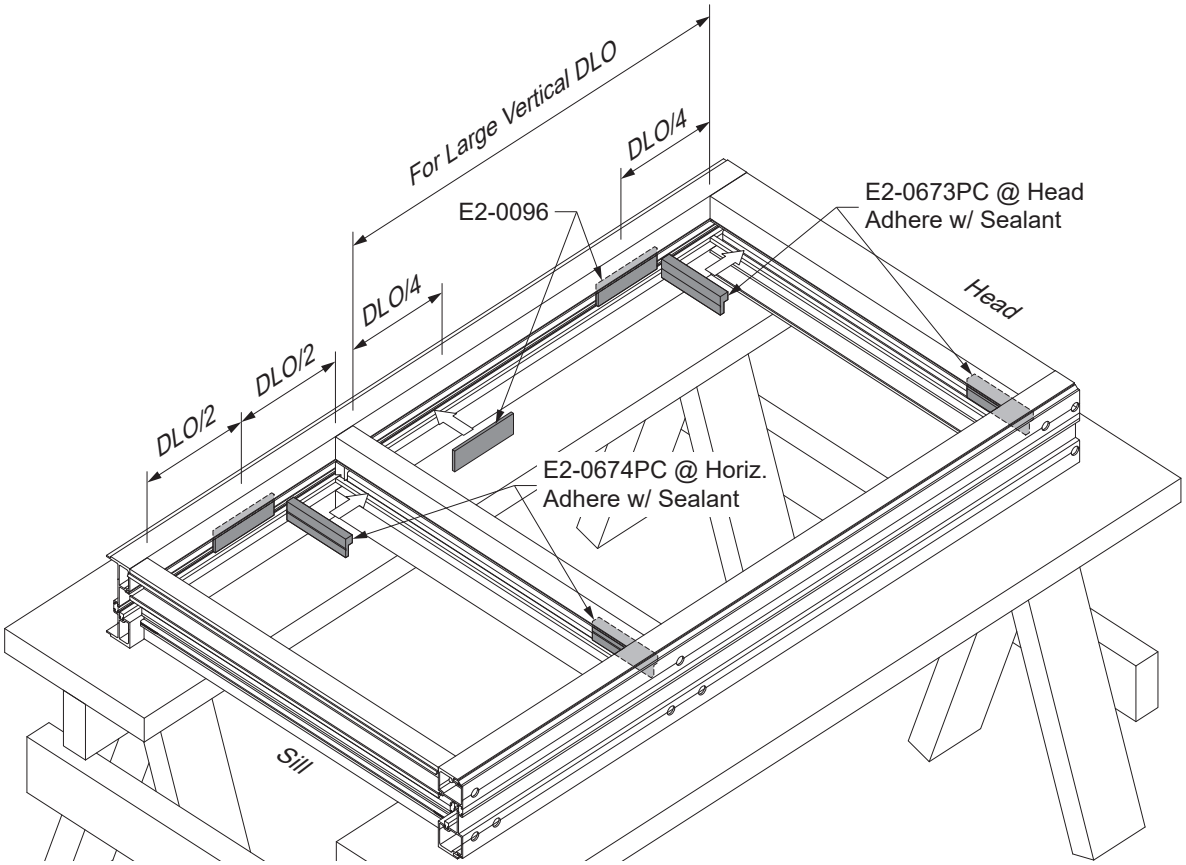

Detail 20
Outside Glazing

Packing/Shipping Notes:
If packing units horizontally, set units with shallow pocket down. Also on conditions with a double pocket, like a jamb/jamb punched opening or similar corner condition, use E2-0075 setting block on female mullion (Ship This Side Down). See **Page 27** for application of “This Side Down” label.

FRAME ASSEMBLY

STEP 11
INSTALL SETTING AND SIDE BLOCKS (INSIDE GLAZING)

-Adhere E2-9938 setting blocks with sealant into the glazing pockets of the sill and intermediate horizontal as shown in **Detail 21**.

-Apply E2-0096 side blocks into the glazing pockets of every male mullion (shallow pocket.)

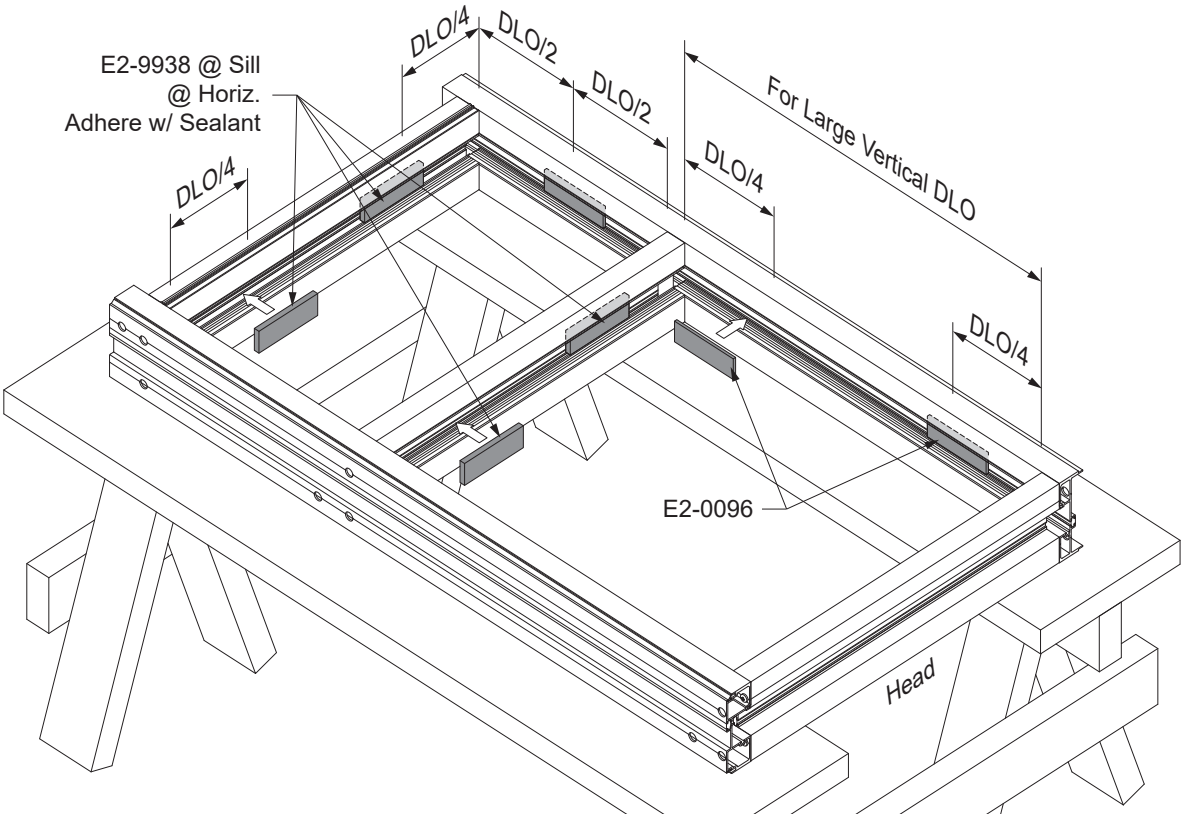

Detail 21
Inside Glazing

Packing/Shipping Notes:
If packing units horizontally, set units with shallow pocket down. Also on conditions with a double pocket, like a jamb/jamb punched opening or similar corner condition, use E2-0075 setting block on female mullion (Ship This Side Down). See **Page 30** for application of “This Side Down” label.

GLAZING

STEP 12
INSTALL GLASS (OUTSIDE GLAZING)

Determine the glass size:

	Width	Height
Standard Glazing	**D.L.O. + 1-1/8”**	**D.L.O. + 1-1/8”**

-Install the glass lites into the daylight openings, bring the glass lites into the deep glazing pocket first. Then move the glass lites to their proper positions ensuring a 9/16” glass bite all around and tight against the top and side blocks.

See **Detail 22**.

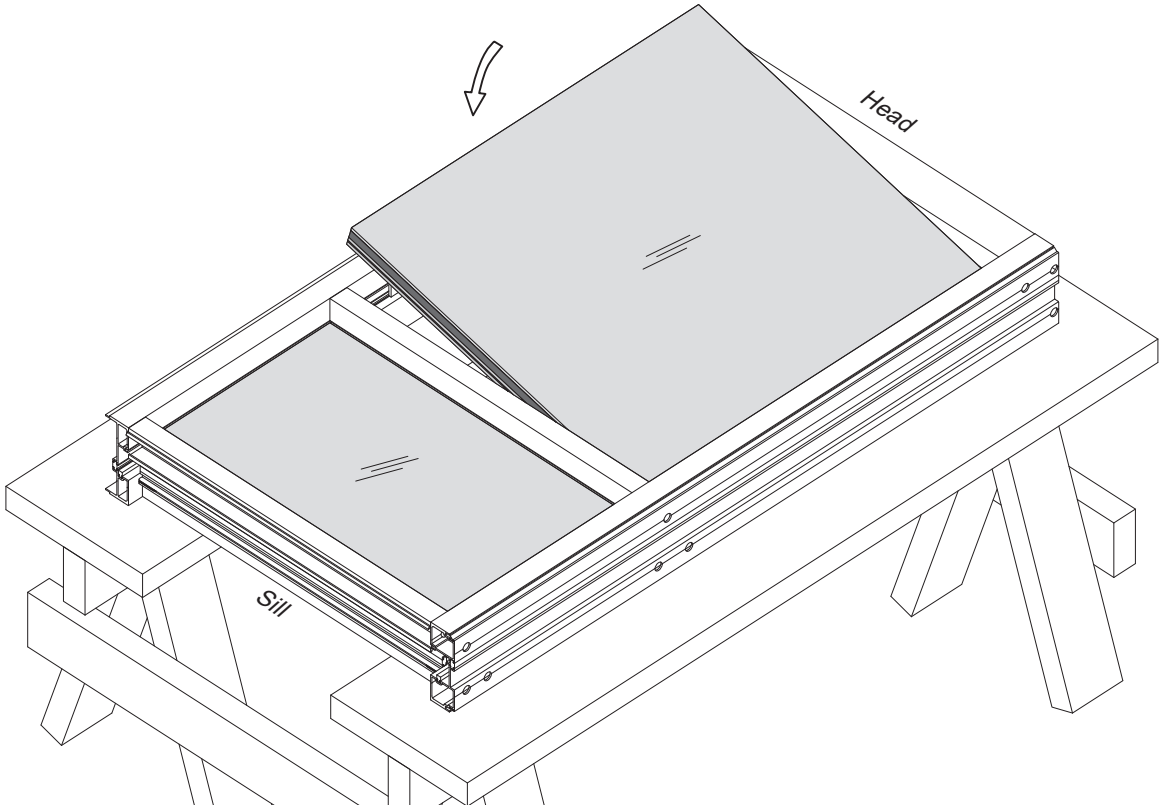

Detail 22
Outside Glazing

Note: Do not glaze the units adjacent to the door frame at this time.

GLAZING

STEP 12
INSTALL GLASS (INSIDE GLAZING)

Determine the glass size:

	Width	Height
Standard Glazing	**D.L.O. + 1-1/8”**	**D.L.O. + 1-1/8”**

-Install the glass lites into the daylight openings, bring the glass lites into the deep glazing pocket first. Then move the glass lites to their proper positions ensuring a 9/16” glass bite all around and tight against the setting and side blocks.

See **Detail 23**.

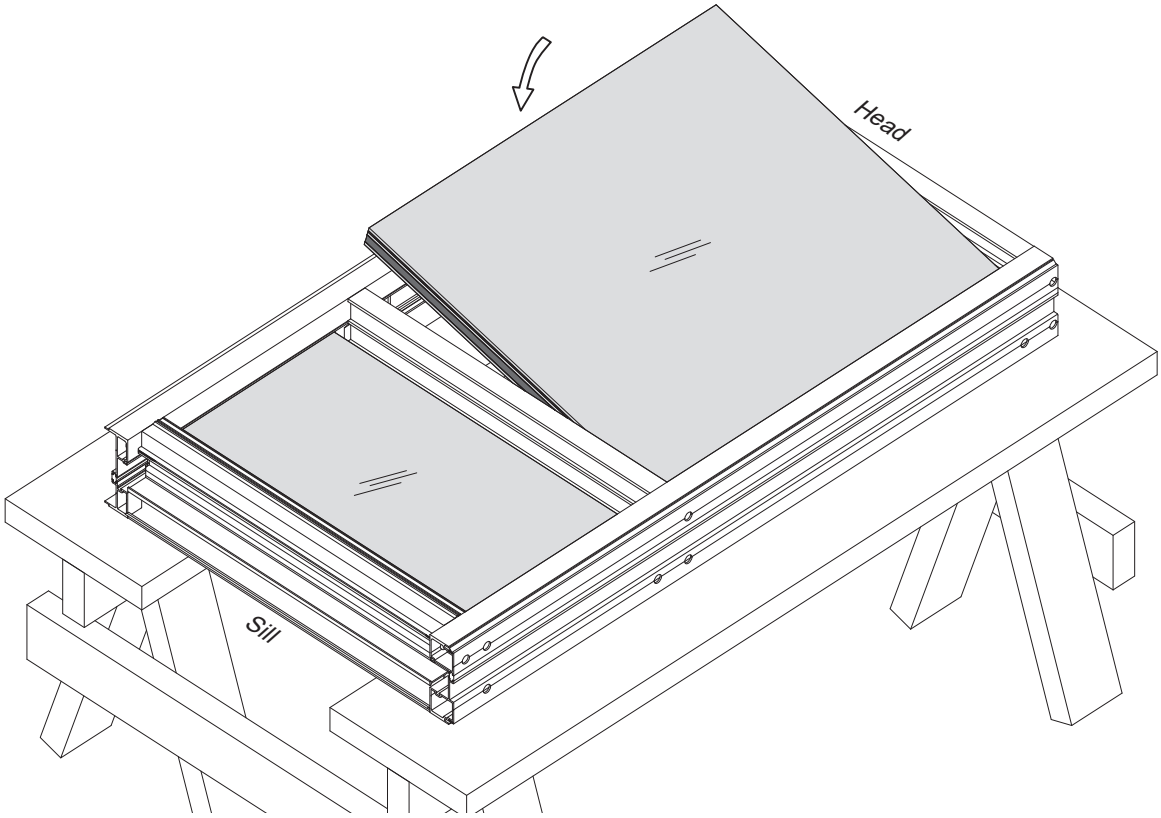

Detail 23
Inside Glazing

Note: Do not glaze the units adjacent to the door frame at this time.

GLAZING

STEP 13
INSTALL SETTING / ANTI-WALK BLOCKS (OUTSIDE GLAZING)

-Insert E2-0095 setting blocks under the glass at the sill and intermediate horizontals at quarter points of the horizontal daylight opening or as specified by engineering calculations. Adhere the setting blocks with sealant. If the glass is oversized, trim the setting blocks to fit.

-Insert anti-walk blocks into the deep glazing pocket of the female mullion or jamb mullion, centered vertically along the daylight opening or at quarter points along the vertical daylight opening for large daylight opening. Flatten the anti-walk block against the surface of the glass and push it into the opening between the glass and the mullion until it is released into the glazing pocket.

See **Detail 24**.

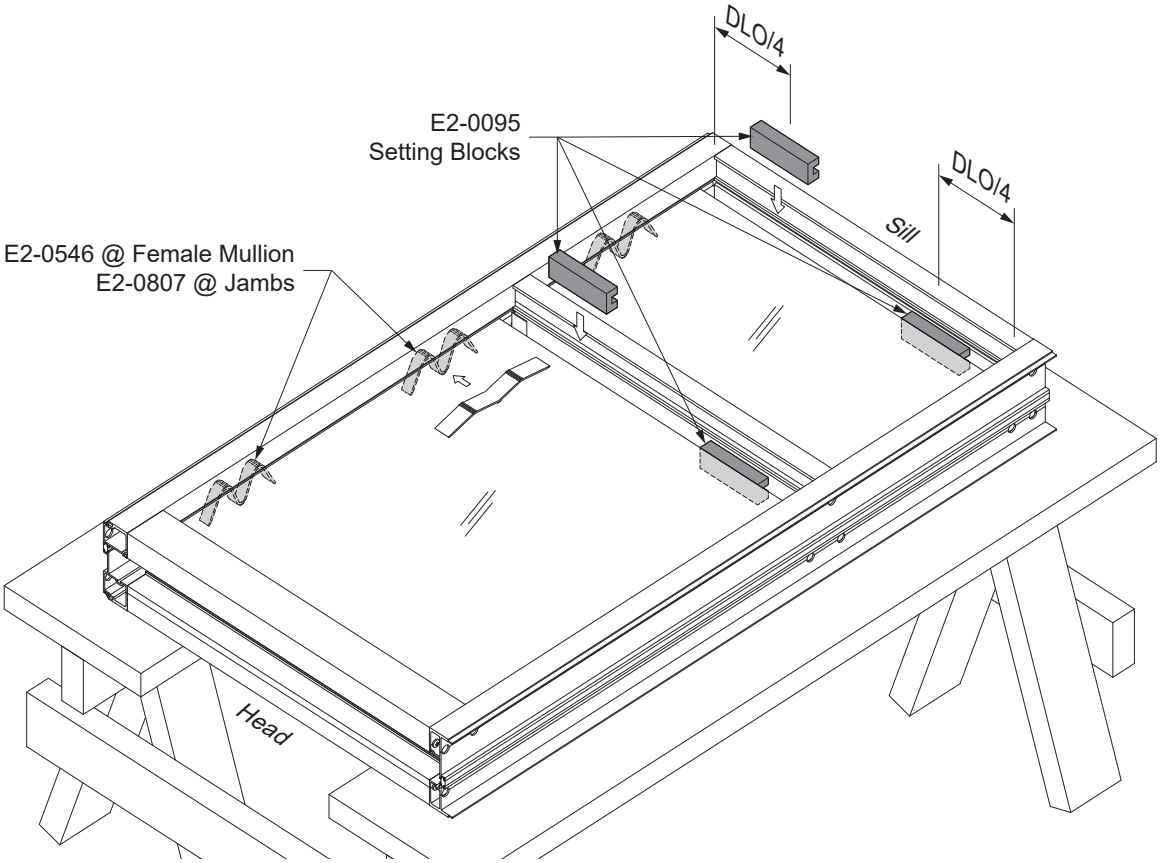

Detail 24
Outside Glazing

GLAZING

STEP 13
INSTALL TOP / ANTI-WALK BLOCKS (INSIDE GLAZING)

-Inside glazing units require two different setting blocks stacked together at the top of each glass lite.
-First, adhere the E2-0674PC top blocks with sealant to the underside at the ends of the head and intermediate horizontals. Then adhere the E2-0363 setting blocks stacked under the E2-0674PC setting blocks.
-Insert anti-walk blocks into the deep glazing pocket of the female mullion or jamb mullion, centered vertically along the daylight opening or at quarter points along the vertical daylight opening for large daylight opening. Flatten the anti-walk block against the surface of the glass and push it into the opening between the glass and the mullion until it is released into the glazing pocket.

See **Detail 25**.

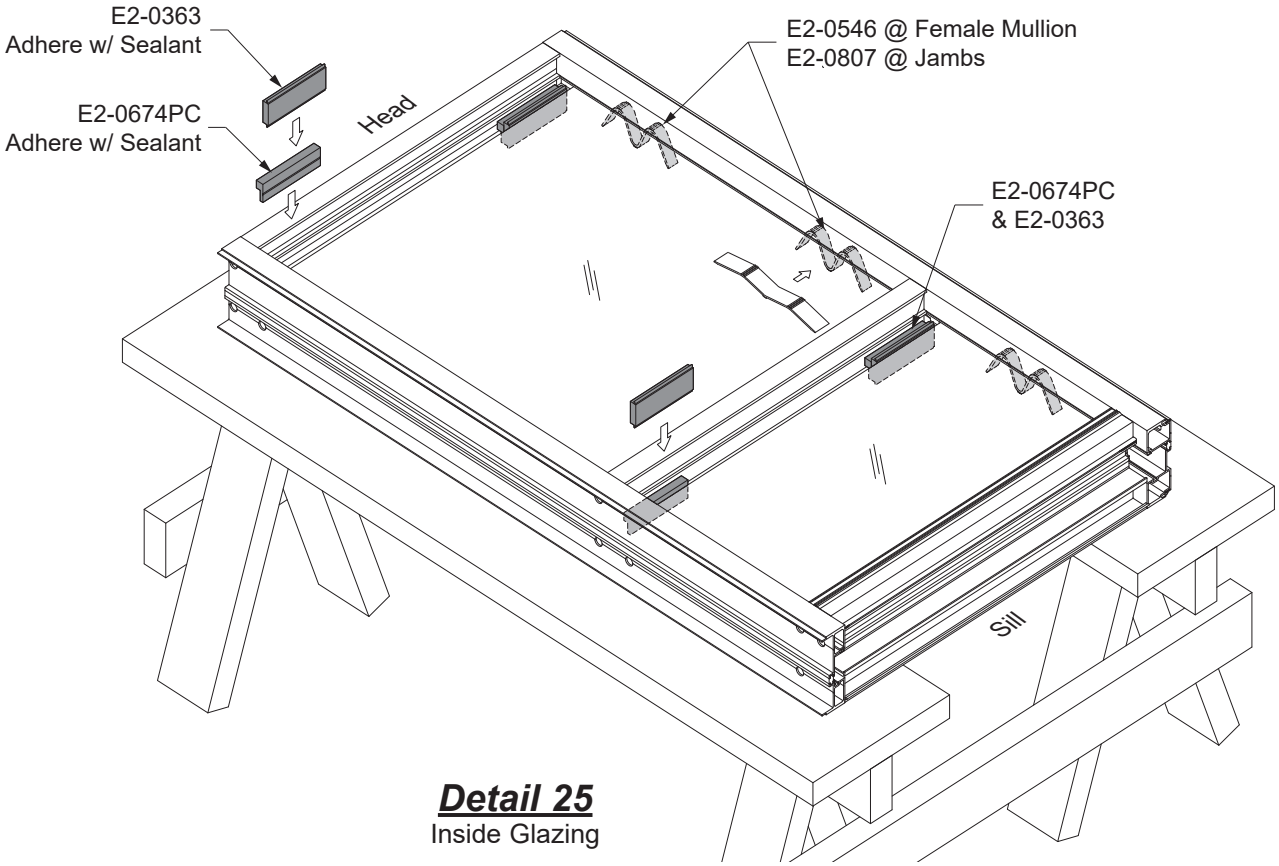

Detail 25
Inside Glazing

GLAZING

STEP 14
INSTALL GLASS STOPS & GLAZING GASKETS

For outside glazed units:
-Install E9-0658 glass stops. Secure the glass stops with glazing gasket, cut to horizontal daylight opening plus(+) 3/16” for each foot of length. Leave the ends of the horizontal gasket out.

-Cut the vertical gaskets to the vertical daylight opening plus(+) 3/16” for each foot of length, and insert them into the mullion reglets. Start with the ends of the gasket first and work your way towards the middle of the daylight opening.

See **Detail 26**.

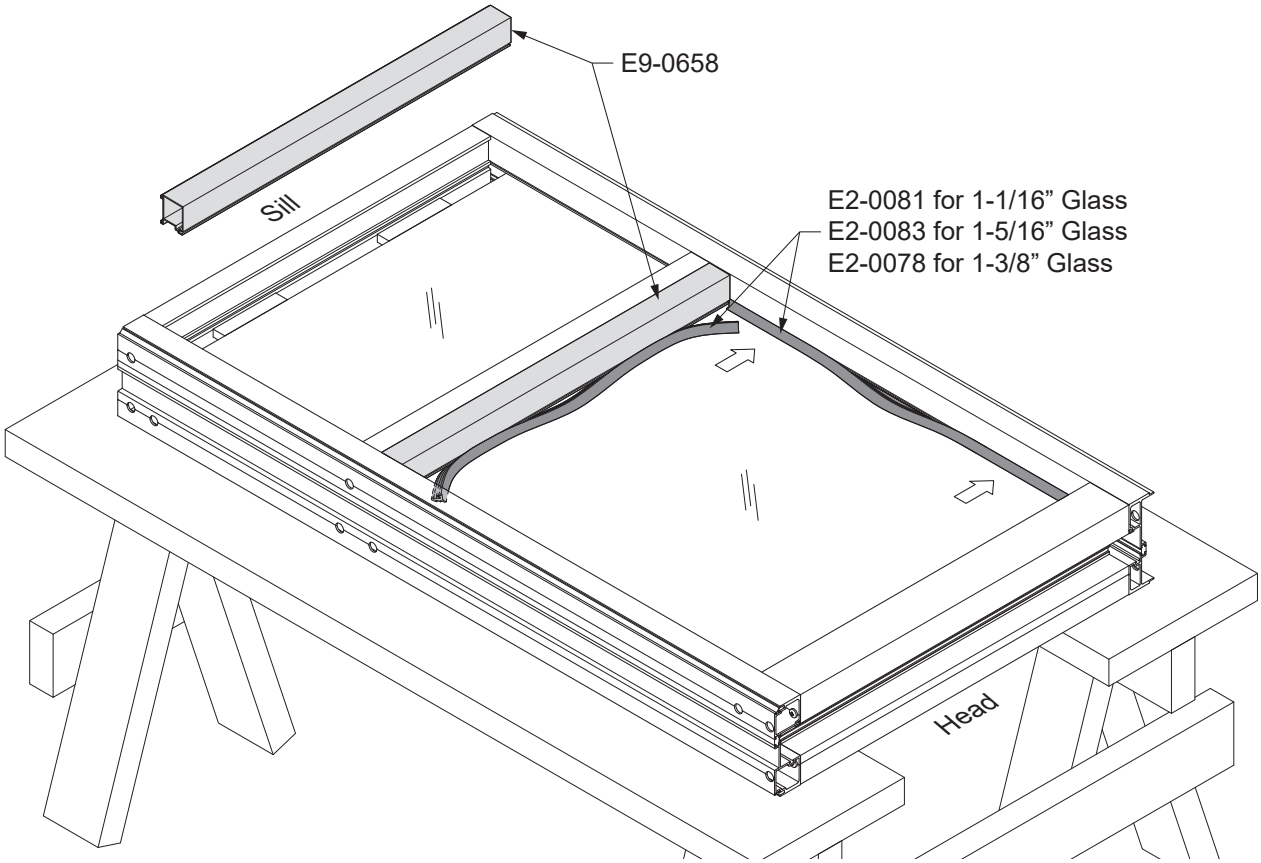

Detail 26
Outside Glazing Shown,
Inside Glazing Similar

GLAZING

STEP 14 (Continued)
INSTALL GLASS STOPS & GLAZING GASKETS

For outside glazed units, Continued:

-Insert the ends of the horizontal exterior glazing gasket and seal the intersection between horizontal and vertical gaskets. Tool excess sealant smooth.

-Affix E4-0008 (This Side Down) static label to the glass, orienting the arrows to the sill and the mullion with the shallow pocket or a jamb with side blocks.

-Do not snap on the head filler at this point.

See **Detail 27**.

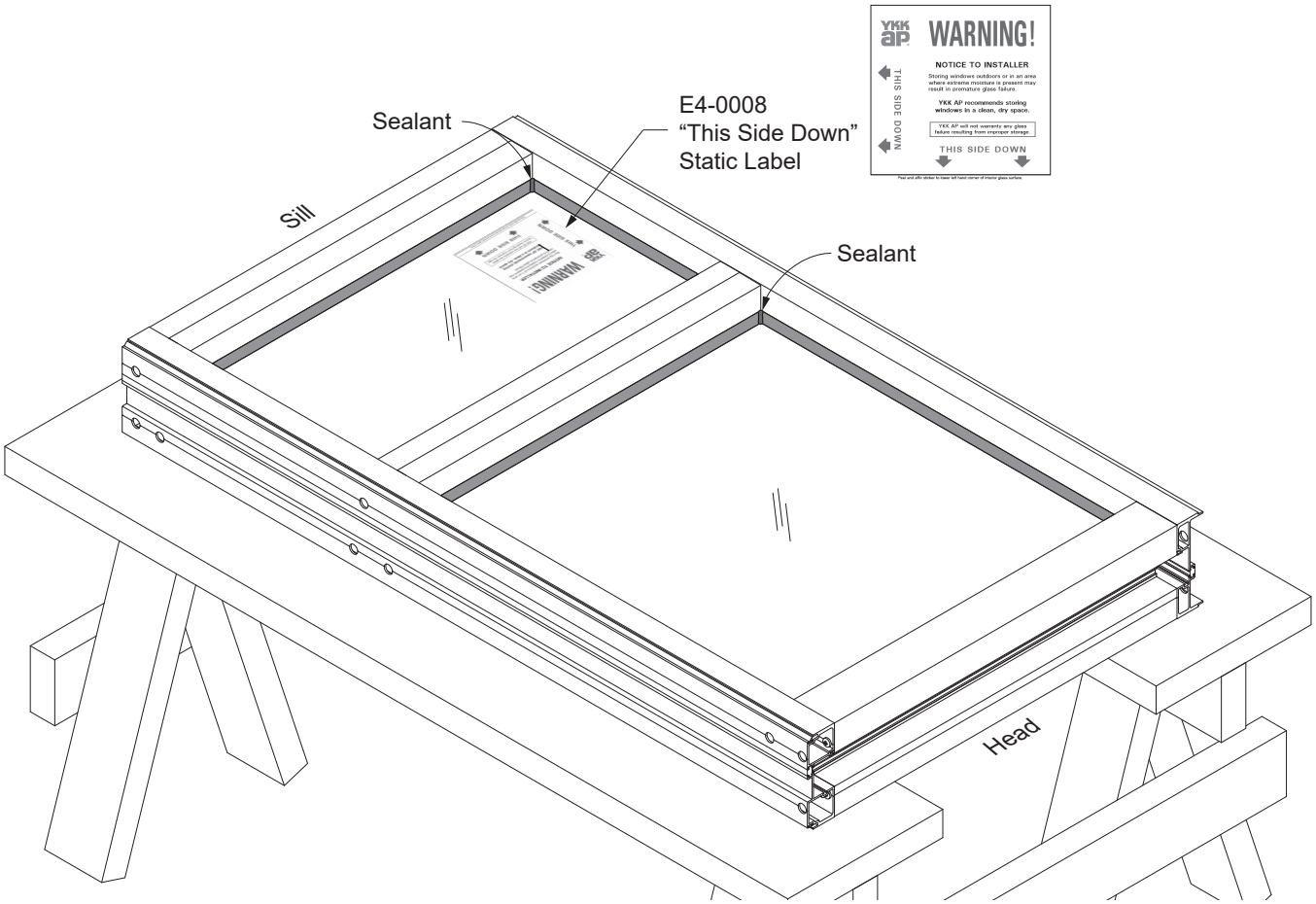

Detail 27
Outside Glazing

GLAZING

STEP 14 (Continued)
INSTALL GLASS STOPS & GLAZING GASKETS

For inside glazed units:

-Install E9-0658 glass stops. For intermediate horizontal only, seal the ends of the glass stop as shown in **Detail 28A** prior to attachment.

-Secure the glass stops with glazing gasket, cut to horizontal daylight opening plus(+) 3/16" for each foot of length. Leave the ends of the horizontal gasket out.

-Where the sill and intermediate horizontals meet the vertical, apply 1" of sealant in each direction between the glass and the aluminum framing. Do not apply this sealant at the head at this time.

See **Detail 28**.

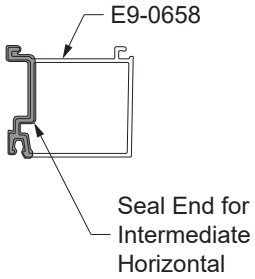

Detail 28A
Outside Glazing

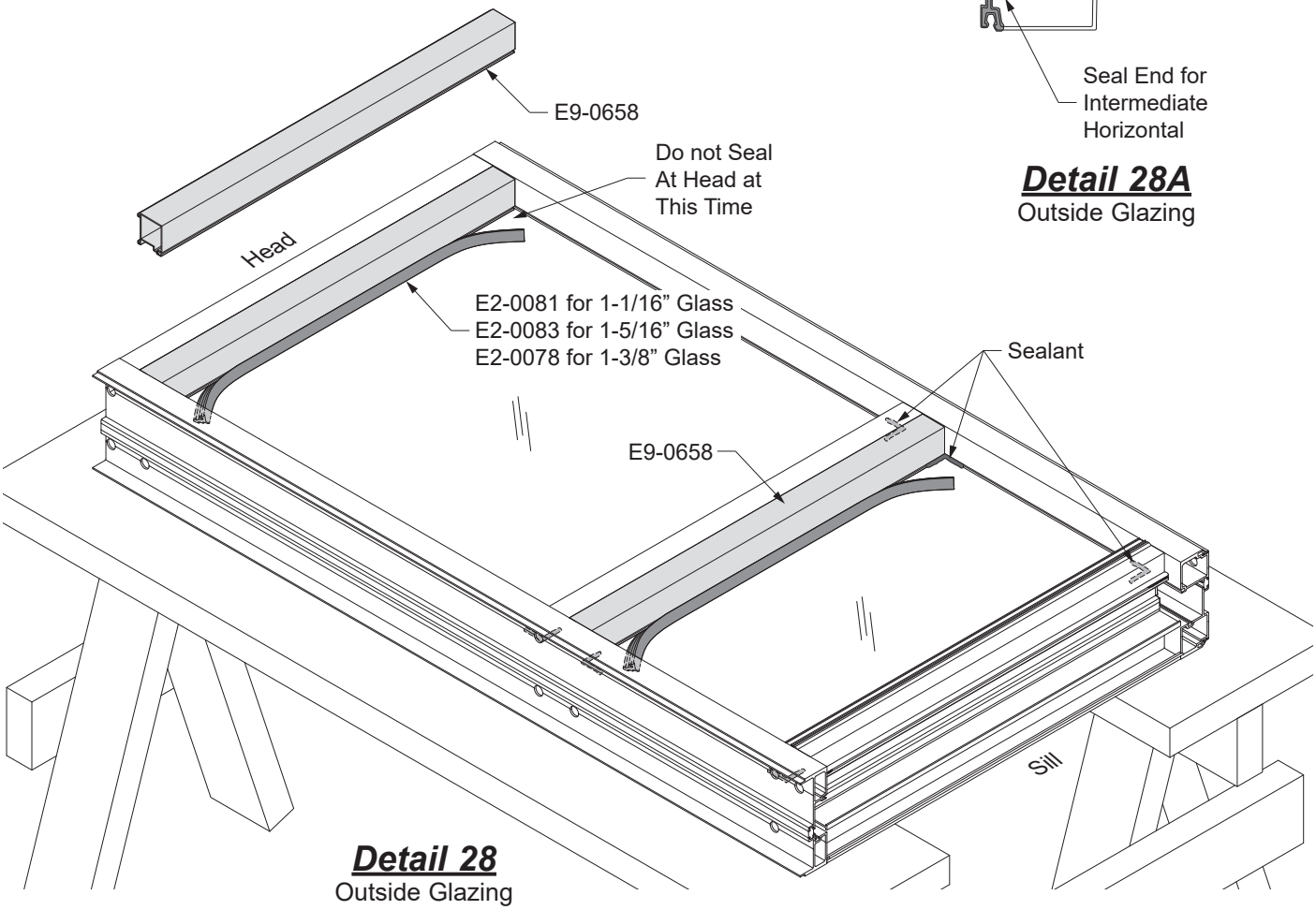

Detail 28
Outside Glazing

GLAZING

STEP 14 (Continued)
INSTALL GLASS STOPS & GLAZING GASKETS

For inside glazed units, Continued:

-Cut the vertical gaskets to the vertical daylight opening plus(+) 3/16” for each foot of length, and insert them into the mullion reglets. Start with the ends of the gasket first and work your way towards the middle of the daylight opening.

See **Detail 29**.

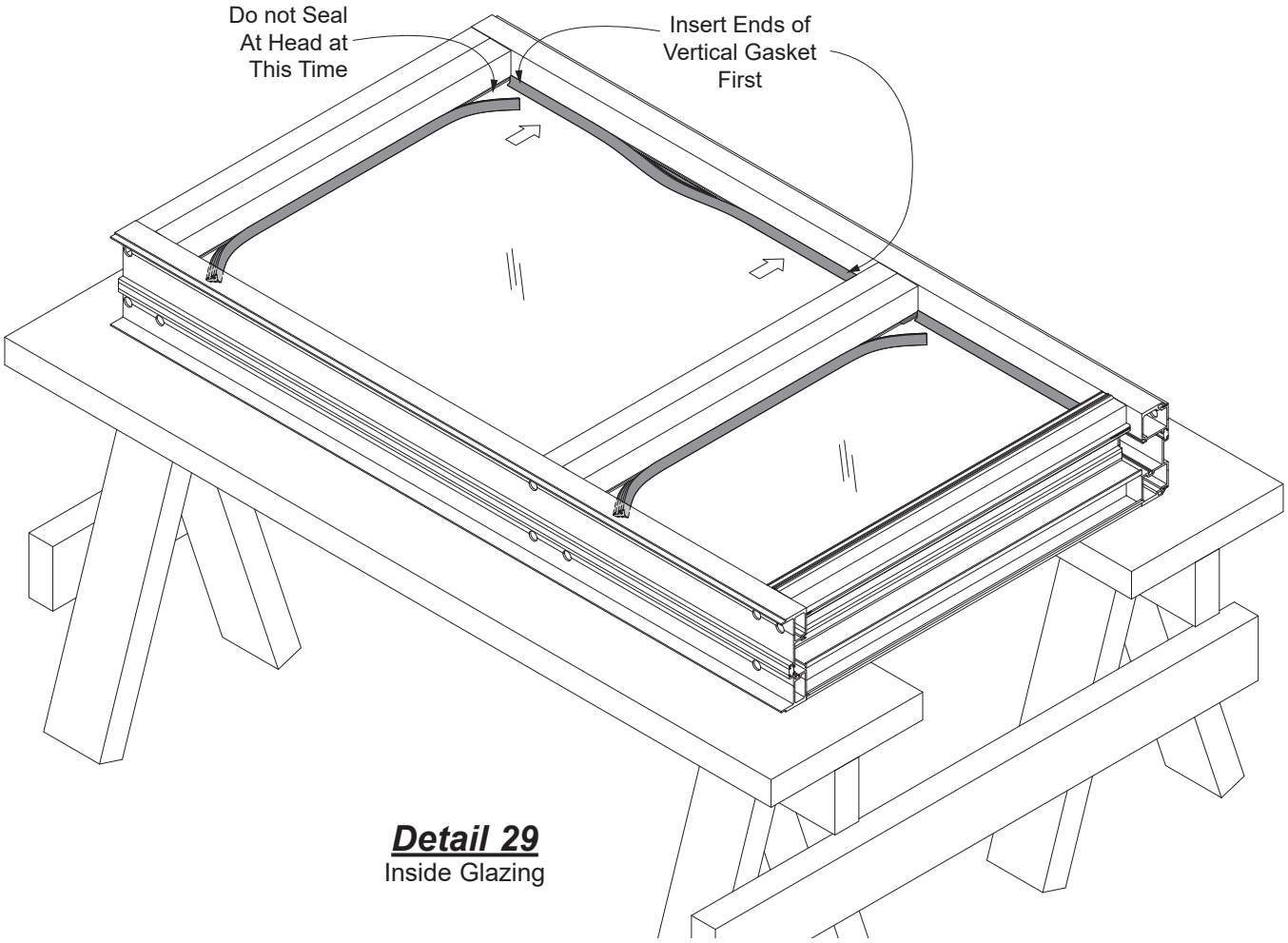

Detail 29
Inside Glazing

GLAZING

STEP 14 (Continued)
INSTALL GLASS STOPS & GLAZING GASKETS

For inside glazed units, Continued:

-Insert the ends of the interior glazing gaskets at the interermediate horizontals only and seal the intersection between horizontal and vertical gaskets. Leave the ends of the horizontal gasket at the head out.

-Affix E4-0008 (This Side Down) static label to the glass, orienting the arrows to the sill and the mullion with the shallow pocket or a jamb with side blocks.

See **Detail 30**.

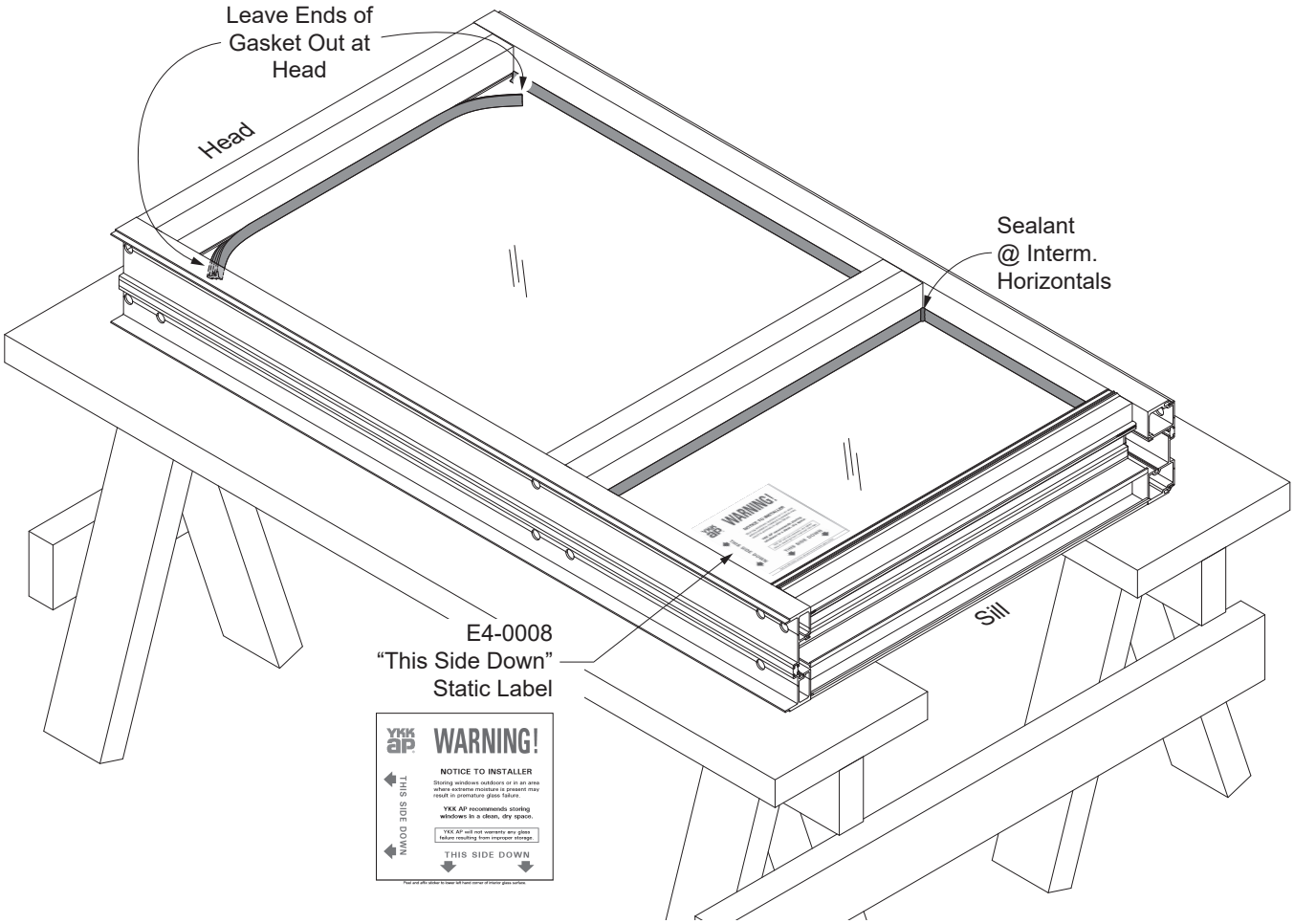

Detail 30
Inside Glazing

GLAZING

STEP 15
APPLY STRUCTURAL SEALANT (OUTSIDE GLAZING SSG SEALANT ONLY)

-Carefully turn the unit over so that the exterior side faces downward. Ensure the glass does not shift in the glazing pockets while doing so.

-Clean all sealant contact surfaces on metal and glass using method approved by sealant manufacturer.
-Apply masking tape to the aluminum and glass according to **Detail 31.**

Note: Apply tape to the glass 1/8” away from the aluminum to provide a 30º bevel.

-Apply approved structural silicone sealant from the bottom to the top of joint.
-Use positive pressure so that sealant completely fills the cavity between glass and aluminum.
-Using a 30º nylon beveled spatula, or other non-scratching implement, tool the structural silicone sealant immediately after running the joint. Exert positive pressure while tooling sealant to ensure that the silicone makes complete contact with all surfaces.

Note: Be careful not to remove too much silicone.
The finished joint should be 30º beveled around the glass.

-Immediately remove masking tape while wet; do not allow silicone to skin.
Masking tape must be removed within 10 minutes of tooling.

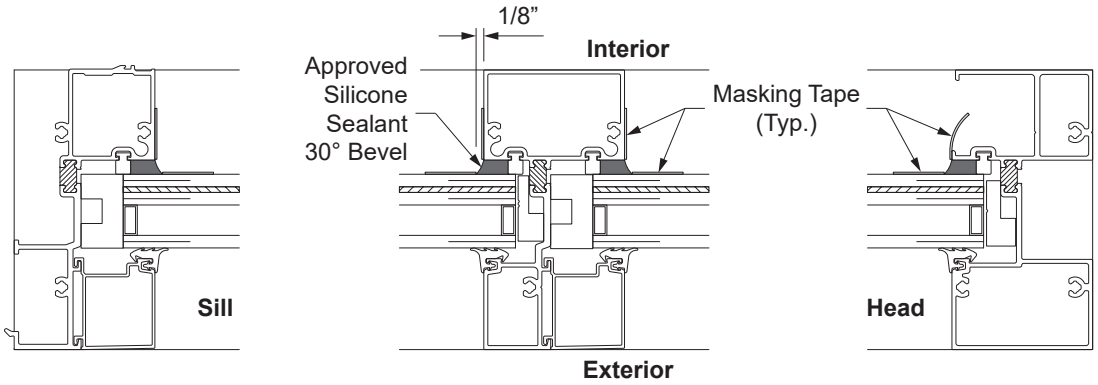

Detail 31
Outside Glazing
SSG Sealant

GLAZING

STEP 15 (Continued)
APPLY STRUCTURAL SEALANT (OUTSIDE GLAZING SSG SEALANT ONLY)

-Do not move the preglazed unit until the sealant is fully cured. Refer to the structural sealant manufacturer for sealant cure time.

Note: Do not snap on the head filler at this point.

See **Detail 32**.

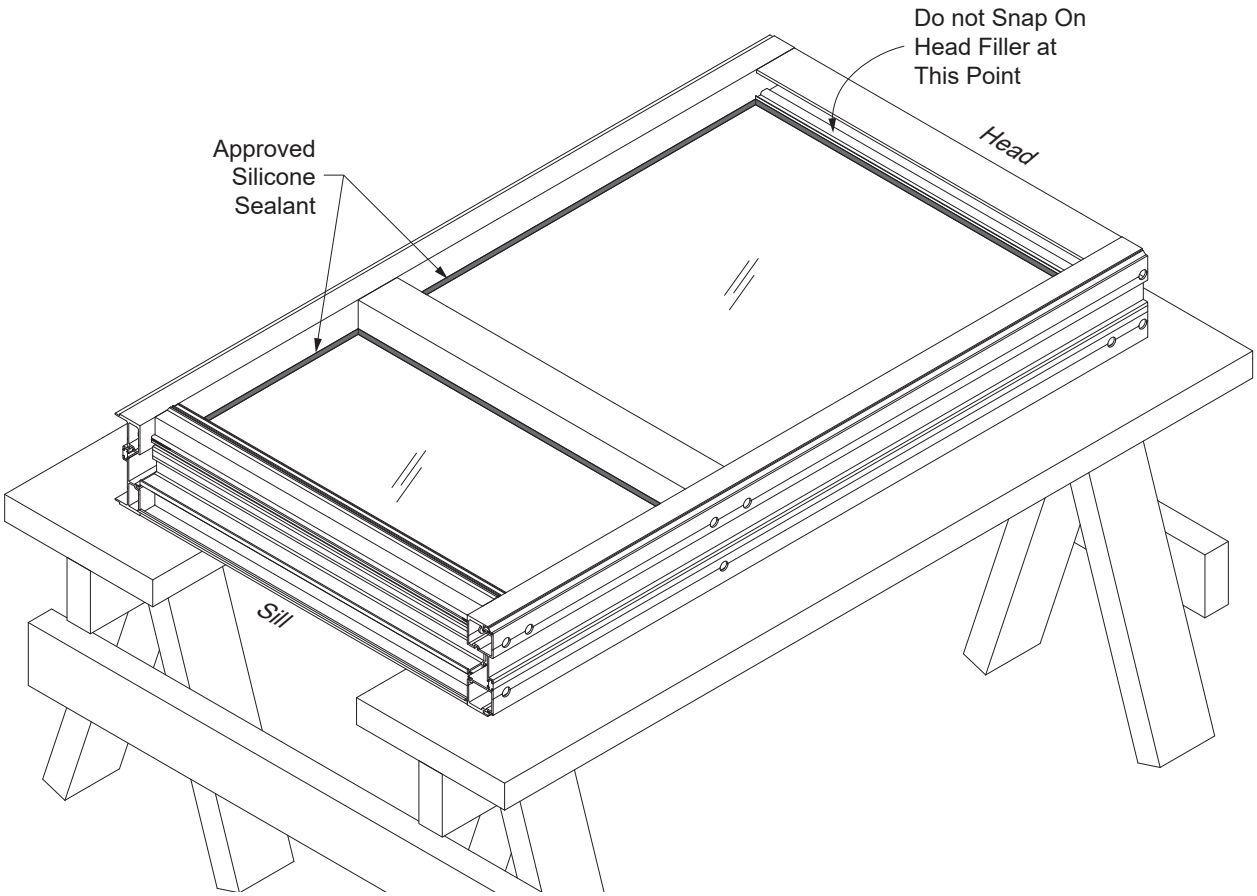

Detail 32
Outside Wet Glazing

FRAME INSTALLATION

STEP 16
INSTALL SILL FLASHING END DAMS

-Hold the end dam with one hand and grab the tab with a pair of pliers.
-Bend the end dam tab left or right 90 degrees in the proper direction.

See **Detail 33.**

Note: The end dam tab must be bent in the correct position for the left or right end of the sill flashing.

-Clean all joint surfaces using Isopropyl Alcohol.
-Apply sealant to the end of sill flashing as shown in **Detail 34.**
-Slide the tab into the top portion of the sill flashing.
-Tap the tab into place with a small tool until the end dam is snug against the end cut of the flashing.
-Fasten the end dam to the sill flashing with two UA-1212 screws, starting at the back, followed by the front.

-Tool sealant along the joint between the end dam and the sill flashing as shown in **Detail 35.**
-Seal over any exposed screw threads.

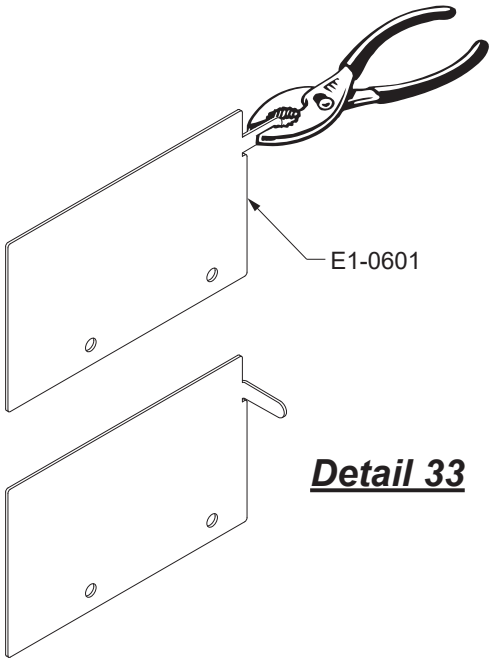

Detail 33

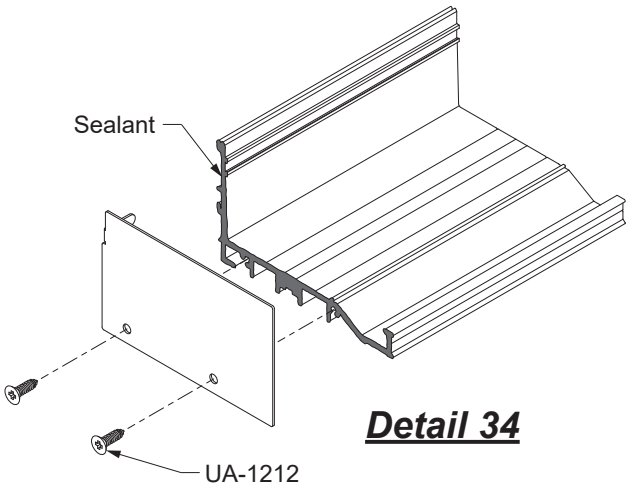

Detail 34

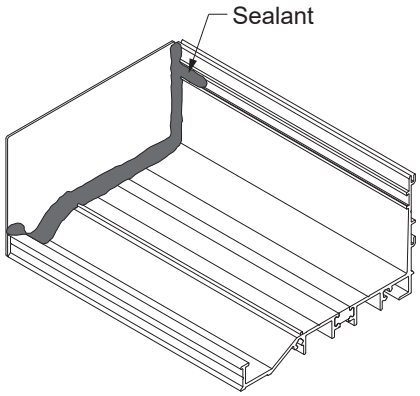

Detail 34

FRAME INSTALLATION

STEP 17
INSTALL SILL FLASHING

-Starting at the smallest opening height, install the sill flashing with a maximum of 3/8” shim underneath. Sill flashing must be installed level.
-Anchor the sill flashing to the structure according to the fabrication previously done at **Step 2**.
-Apply and tool sealant to cover the heads of all anchor fasteners.

STEP 18
INSTALL SILL FLASHING SPLICE SLEEVE

-For sill flashings to be spliced, a 3/8” expansion joint between the sill flashing members is used.
-Remove the nub with a chisel or pliers 1-1/2” from both sides of the splice joint as shown in **Detail 36**.
-After the sill flashing has been shimmed and installed to the building structure, apply a small backer rod to the front of the splice joint, under the sill flashing.

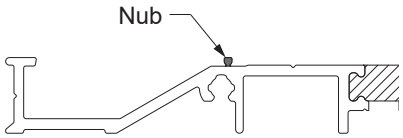

Detail 36

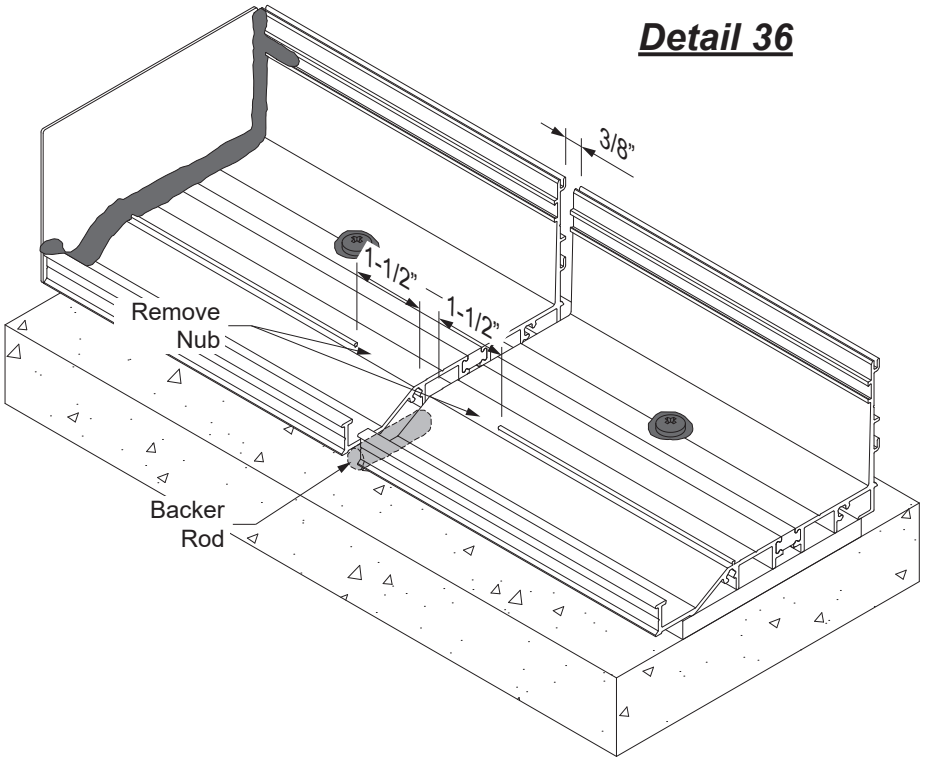

FRAME INSTALLATION

STEP 18 (Continued)
INSTALL SILL FLASHING SPLICE SLEEVE

-Clean the sill flashing and silicone splice sleeve with isopropyl alcohol at the splice location.
-Apply a bed of sealant to the splice joint where the silicone sleeve is to be applied.

See **Detail 37**.

When using E2-0070, a compatible silicone sealant must be used at the splice. Compatible silicone sealants include Tremco Spectrum 2 and Dow Corning 795.

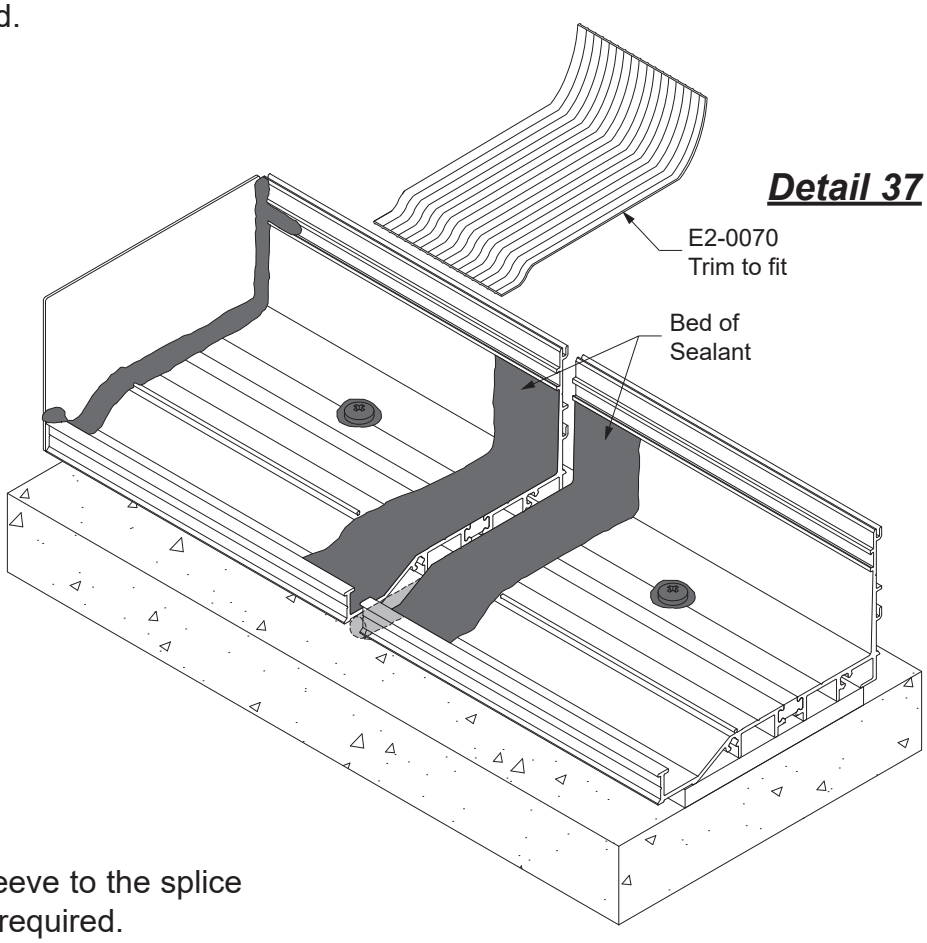

Detail 37

-Apply the E2-0070 silicone sleeve to the splice joint. Trim the sleeve to fit as required.
-Tool sealant tight as shown in **Detail 38 and 39**, squeezing the sheet flat.
-Thoroughly seal the small joint directly in front of the silicone splice sleeve as shown in **Detail 39**.

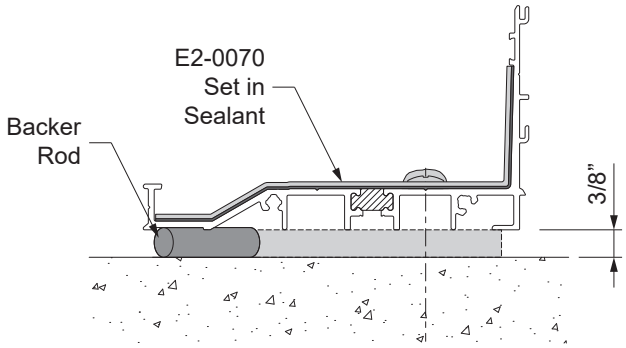

Detail 38

FRAME INSTALLATION

STEP 18 (Continued)
INSTALL SILL FLASHING SPLICE SLEEVE

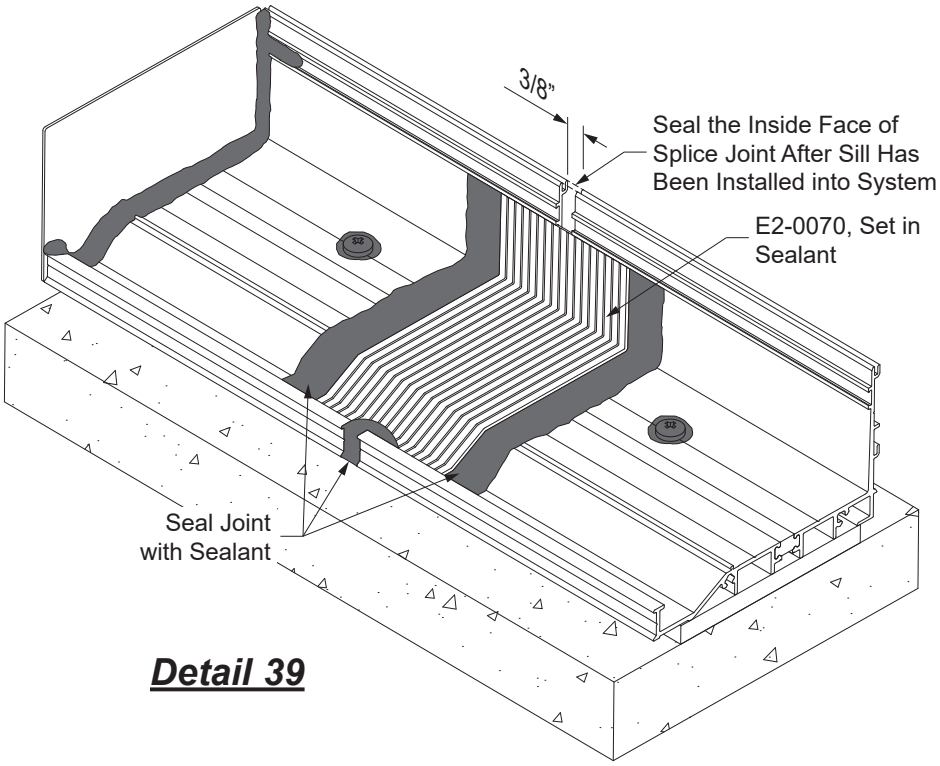

Detail 39

STEP 19
SILL PREPARATION

At every splice condition, apply bond breaker tape to the back of the sill member before it is placed into the sill flashing.

See **Detail 40.**

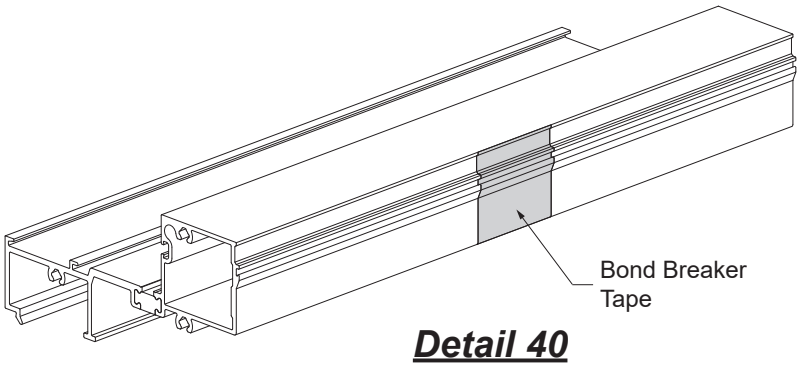

Detail 40
Outside Glazing Shown,
Inside Glazing Similar

FRAME INSTALLATION

STEP 20
INSTALL SILL FLASHING AT CORNERS

-Cut two 12” long pieces of sill flashing and miter (45° for 90° corners and 67.5° for 135° corners.)
-Align the two pieces at the corner condition with the mitered ends pushed together tight and anchor the sill flashing as indicated on approved shop drawings.
-Apply and tool sealant to the mitered joint and anchor heads.

See **Detail 41**.

-Continue installing the rest of the sill flashing, providing a 3/8” expansion joint at splices shown in **Step 18** on **Page 34**.

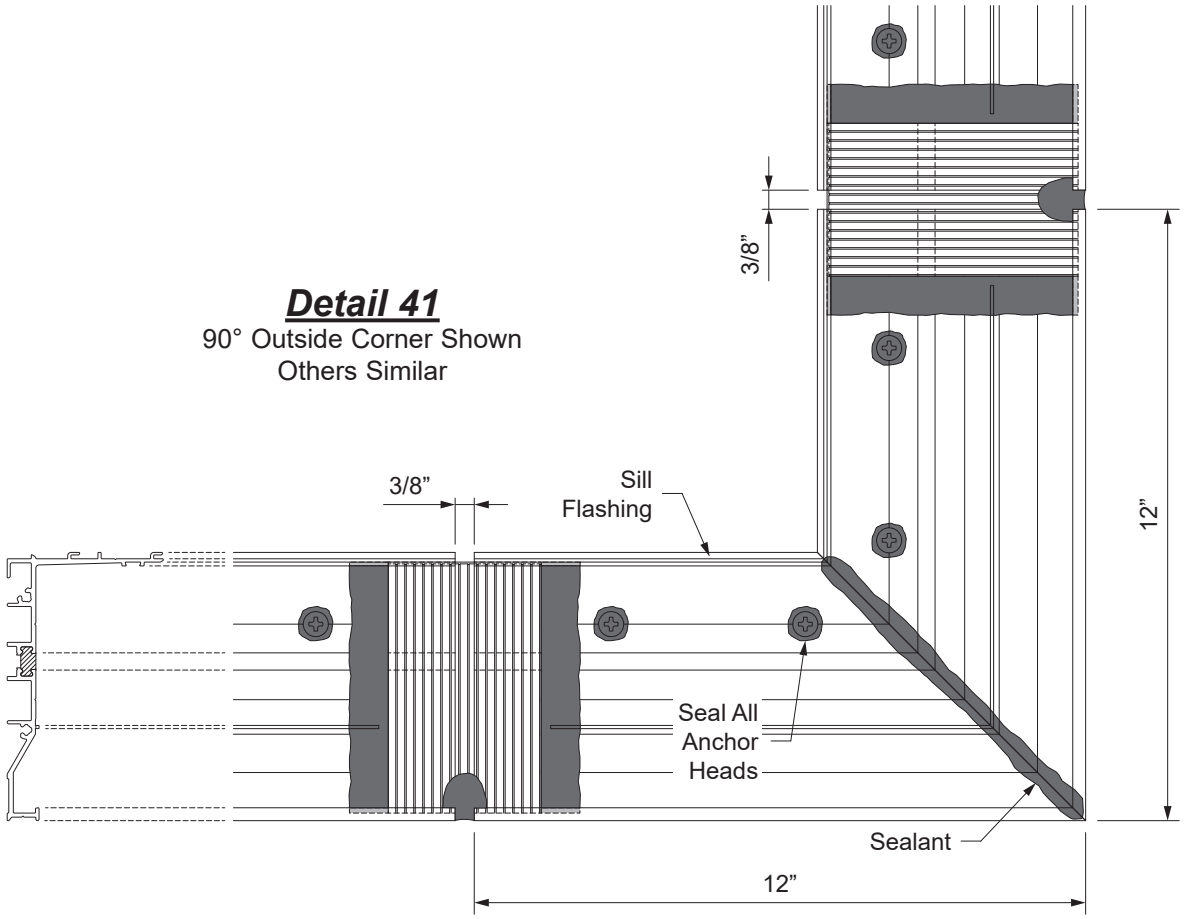

FRAME INSTALLATION

STEP 21
PREPARE DOOR JAMBS (AIR THRESHOLD ONLY)

-Prior to snapping the assembled frames into the door jamb, the end of the sill flashing needs to be sealed to the door jamb.

-Apply and tool sealant to all sill flashing to door jamb joints.
-Apply sealant to completely fill the door jamb cavity and ramp the sealant down onto the sill flashing.
See **Detail 42**.

Refer to the **35H/50H** or **35HL/50HL Entrances Installation Manual** for door installation instructions.

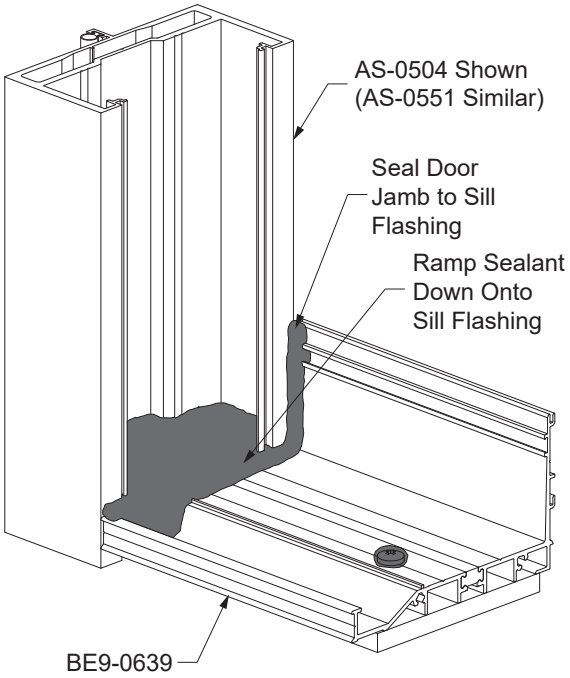

Detail 42

FRAME INSTALLATION

STEP 22
INSTALL FRAMES

-The female mullion half of the second unit engages into the male mullion half of the previously installed unit, from the side.

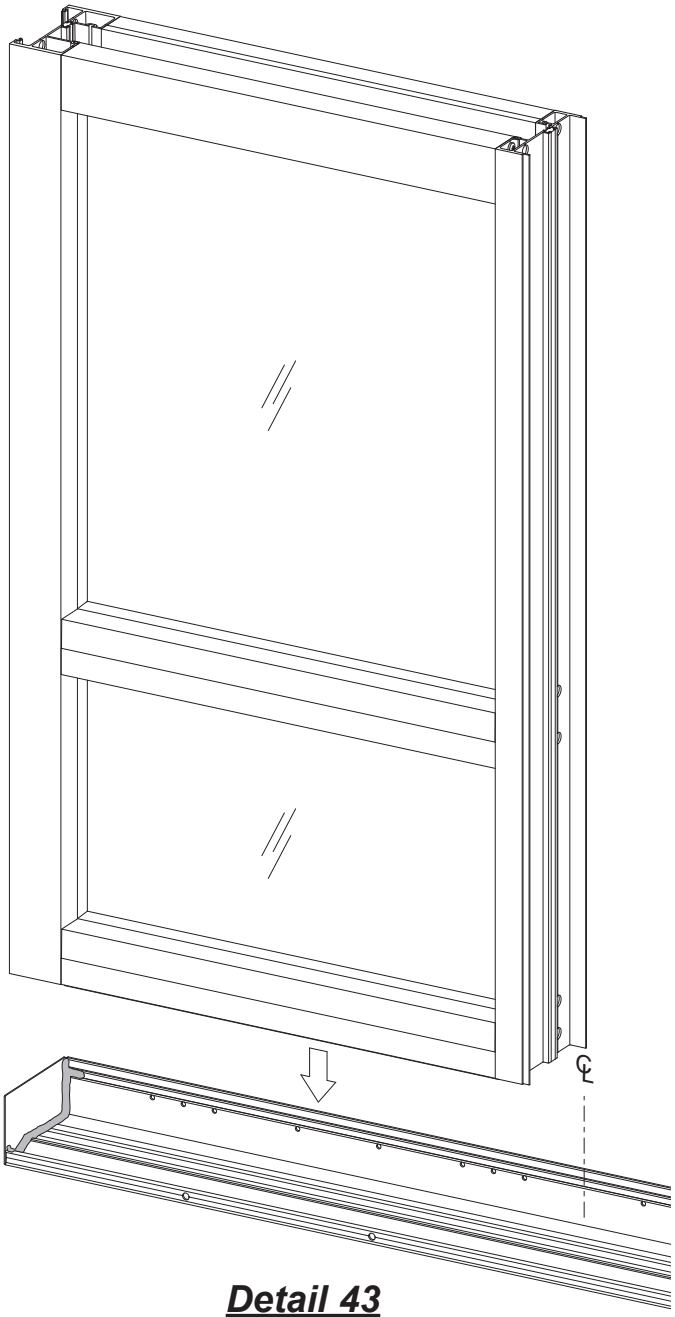

Detail 43

-Set the frame into place as shown on **Detail 43**. Set the unit first on the exterior lip of the sill flashing and rotate the unit until it snaps into place. Ensure a maximum shim space of 3/8” at head and jambs.

See **Detail 44**.

-Taking care to ensure the framing unit is plumb, level, square, and true, anchor the framing unit to the substrate, first at the head using fasteners as specified by engineering calculations.

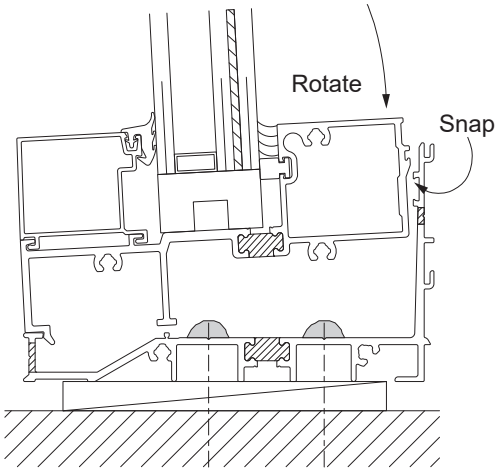

Detail 44

FRAME INSTALLATION

STEP 22
INSTALL FRAMES

Note: If sill has not fully engaged into the sill flashing, tap down with a block of wood to ensure proper engagement prior to fastening.
See **Detail 45**.

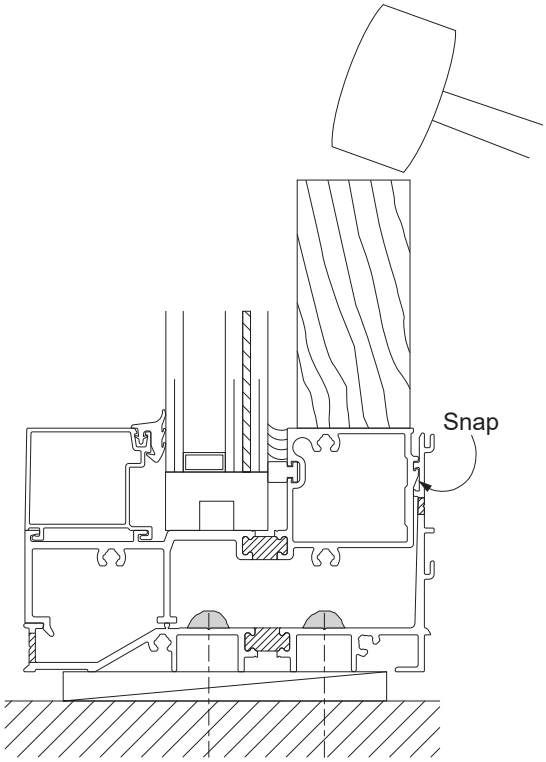

Detail 45

FRAME INSTALLATION

STEP 22 (Continued)
INSTALL FRAMES

-Prior to installing the corner unit, adhere E2-0110 spacer tape to the corner mullion adaptor as shown in **Detail 46**. Note that the adjoining corner unit will not require this spacer tape.

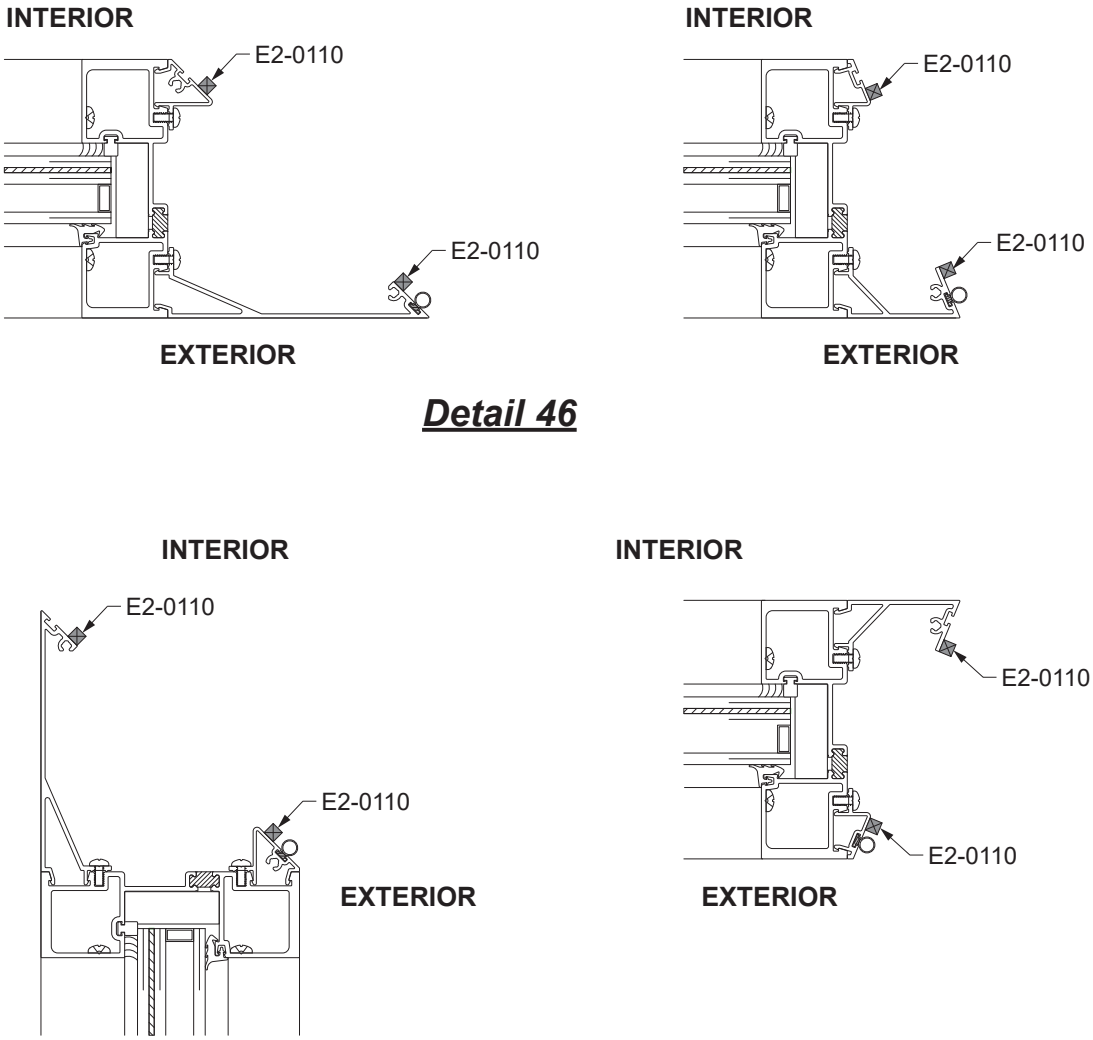

Detail 46

FRAME INSTALLATION

STEP 22 (Continued)
INSTALL FRAMES

Note: Prior to anchoring inside glazing units, first remove the interior glazing gasket and glass stop at the head.

-Match drill 3 holes into the sill member, Ø0.159” (#21) on each side of the mullion, and anchor the sill to the sill flashing using PC-1008-SS fasteners as shown in **Detail 47**.
-Seal the heads of these fasteners and the anchor fasteners at the head. Refer to Florida Product Approvals for minimum embedment into the substrate.

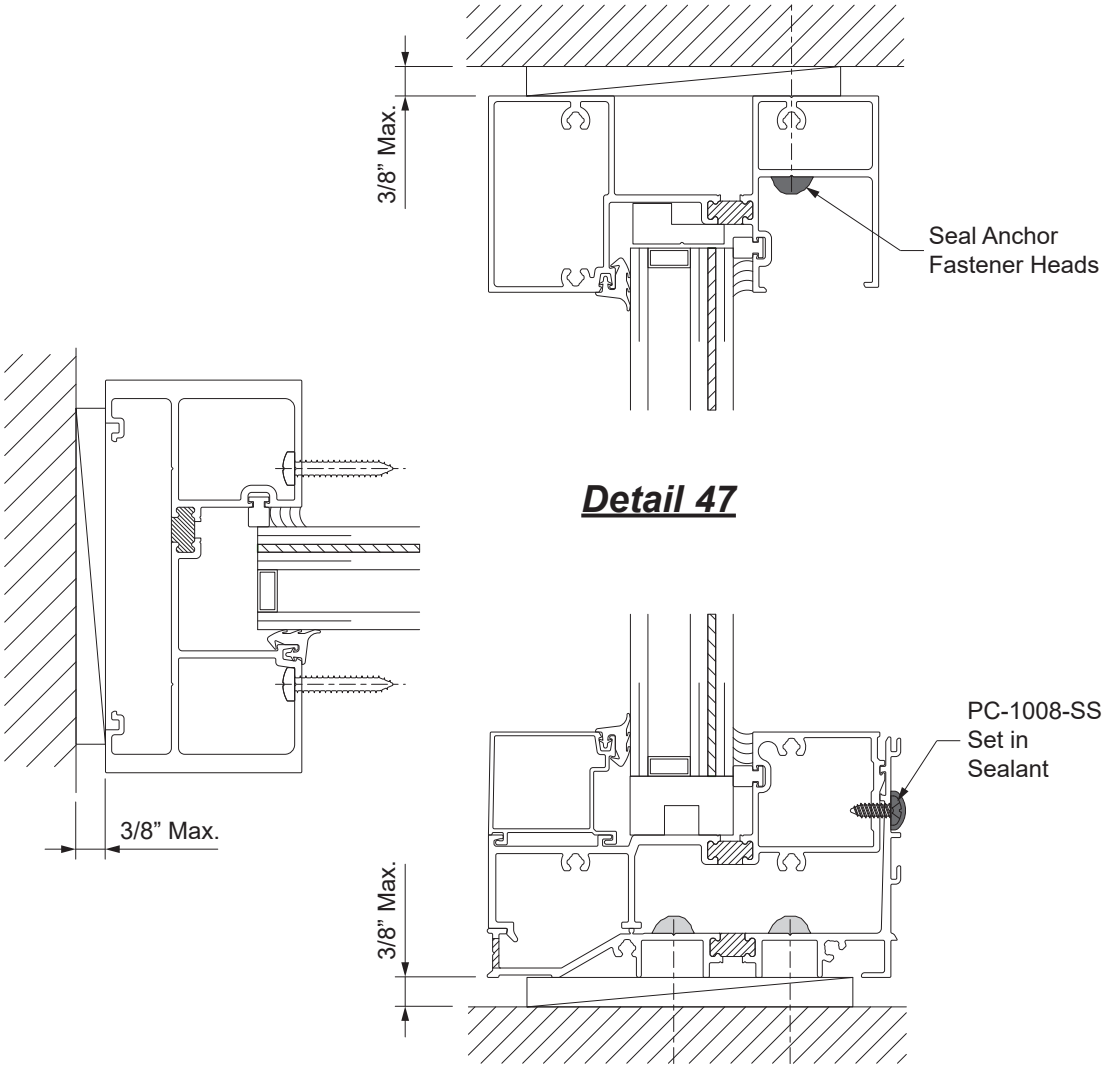

Detail 47

FRAME INSTALLATION

STEP 22 (Continued)
INSTALL FRAMES

-Just prior to installing the next unit, apply sealant to the interior reglet of the female mullion where it will interface with the male mullion of the installed unit (from bottom of mullion and 6” up) as shown in **Detail 48**.

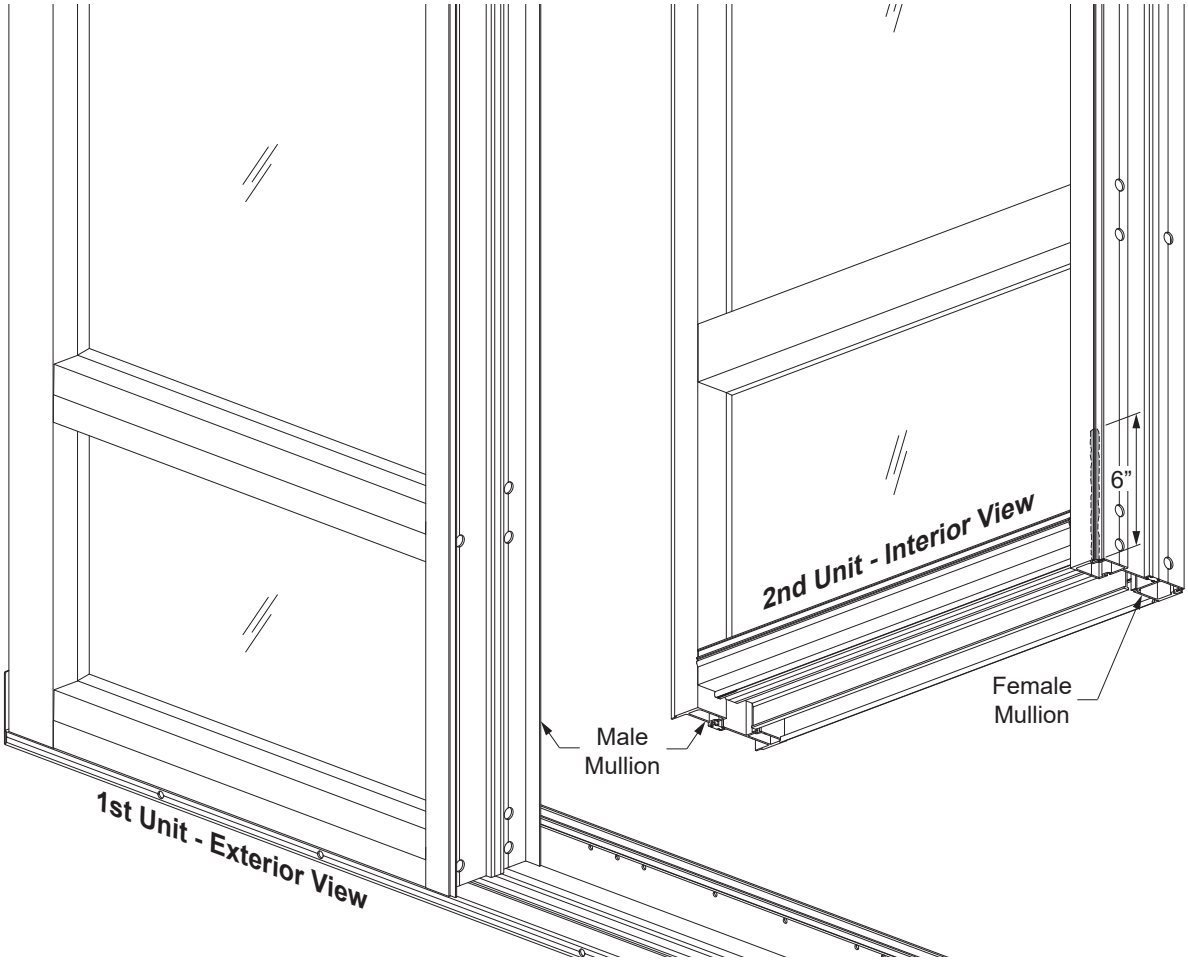

Detail 48

FRAME INSTALLATION

STEP 22 (Continued)
INSTALL FRAMES

-Install the next framing unit, taking care to ensure that the unit is plumb, level, square, and true, and that the female mullion fully interfaces with the male mullion from the previous unit.
-Ensure a 1/8” gap between the mullion halves. Corner mullion halves will have a 1/4” gap.

Note: A panel spacer (E3-0044, taped to the male mullion) can be used to ensure the units are properly spaced.

See **Detail 49 & 49A**.

-Repeat **Step 22** until all units are installed.

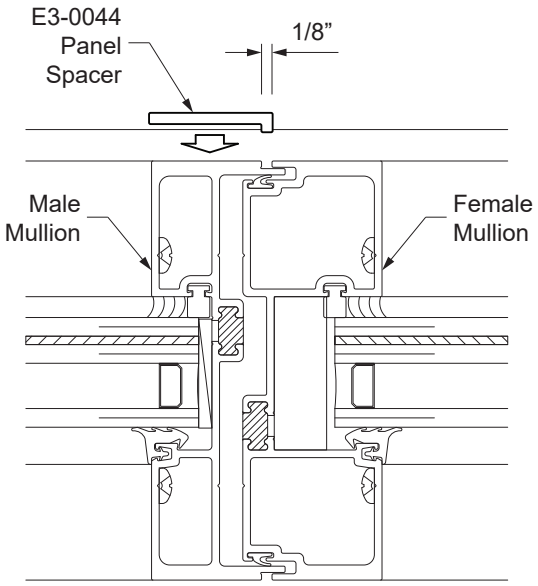

Detail 49

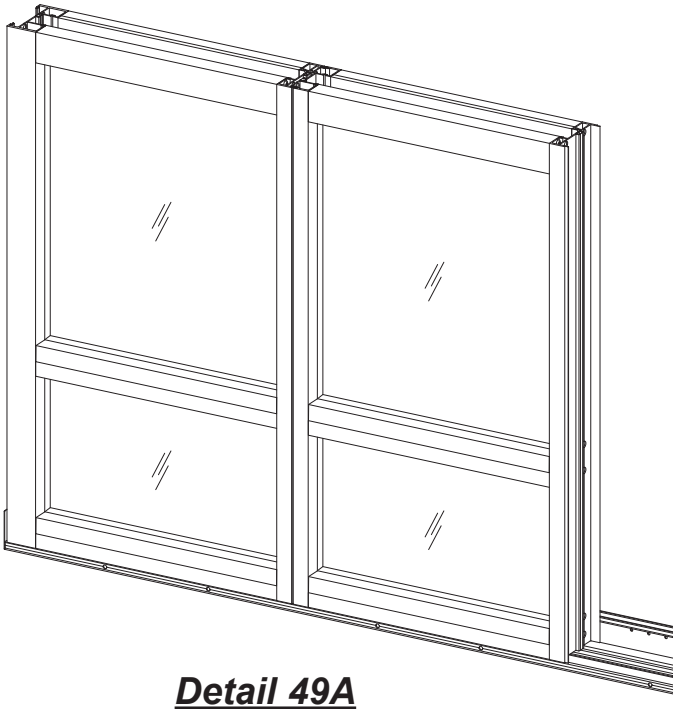

Detail 49A
Exterior View

FRAME INSTALLATION

STEP 22 (Continued)
INSTALL FRAMES

-Snap together the door frame to the adjacent units.
-Using the deep pocket filler, match drill 0.161” diameter tap holes into the door frame. If steel reinforcing is used, match drill into the steel only.
-Fasten the deep pocket fillers of the units adjacent to the door jamb to the door framing using FC-1016 fasteners as shown in **Detail 50**. Do not overtighten the screws when fastening into door jamb.
-If steel reinforcing is used, use FF-1008-SS fasteners. See **Detail 50A**.

Refer to the **YHS 50 TU Field Glazed Installation Manual** for the glazing of the adjacent units.

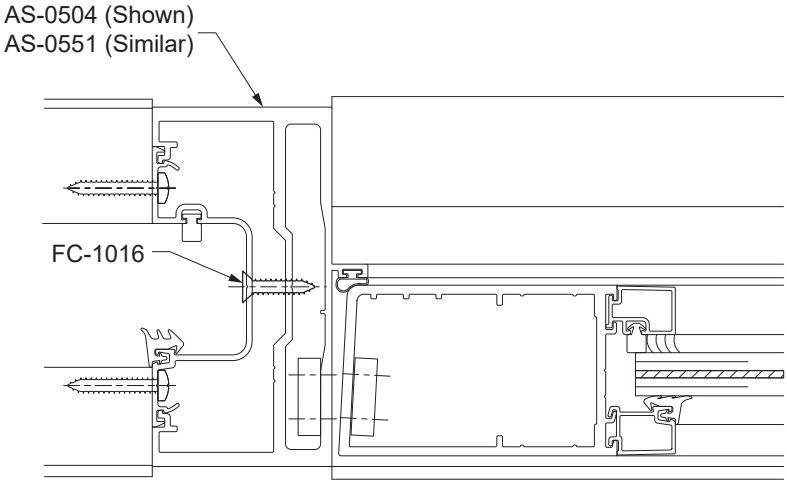

Detail 50

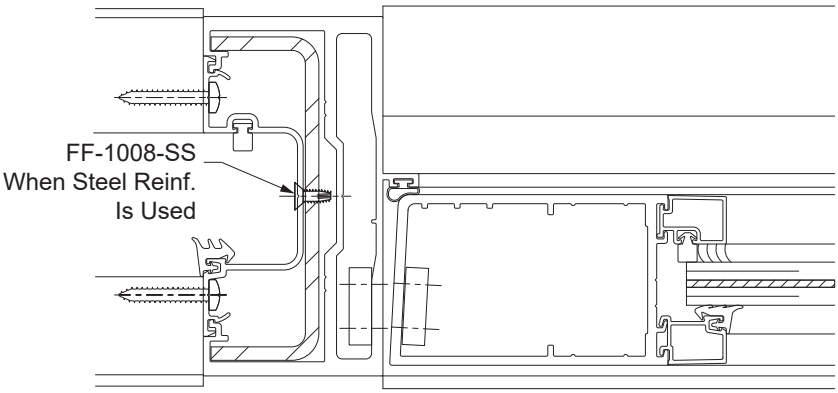

Detail 50A
W/ Steel Reinf.

FRAME INSTALLATION

STEP 23
APPLY PERIMETER SEALANT

-Once all the units are installed, apply perimeter sealant required on interior and exterior of the storefront system.
-Install backer rod around the perimeter of the frame.
-Apply perimeter sealant to the joint between the frame and the structure.
-Avoid getting sealant into the sill flashing weep holes.

See **Detail 51**.

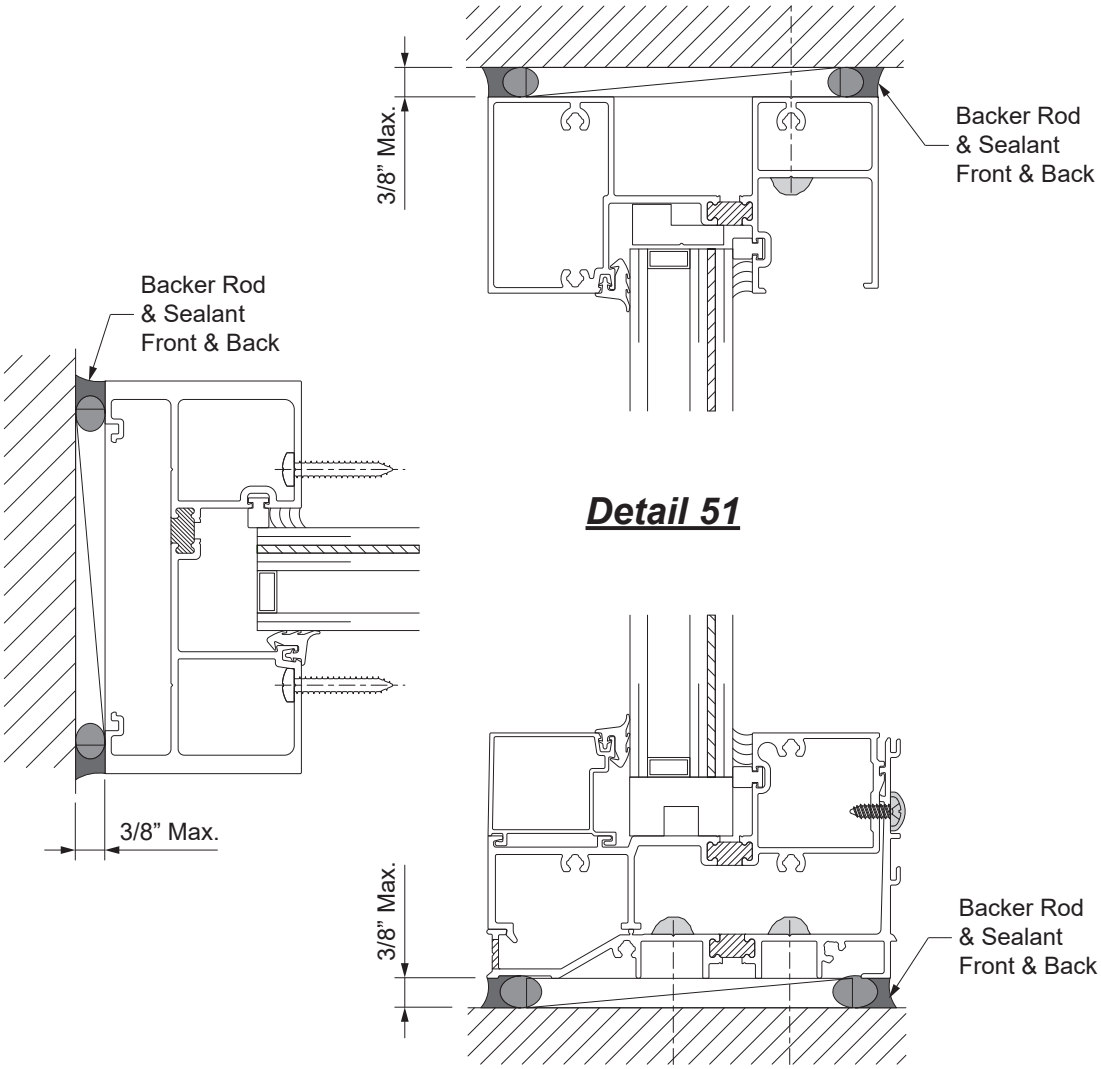

Detail 51

FRAME INSTALLATION

STEP 23B
APPLY SEALANT AT CORNER MULLIONS

-Apply backer rod and sealant the at the interior of the corner mullion, the full height of the mullion. Do not seal the exterior side.

See **Detail 52**.

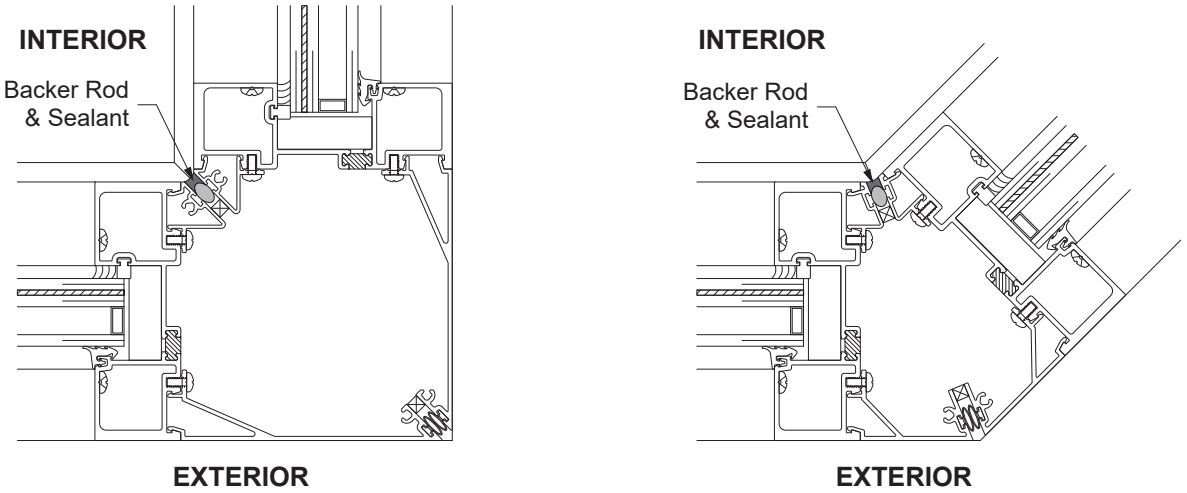

Detail 52

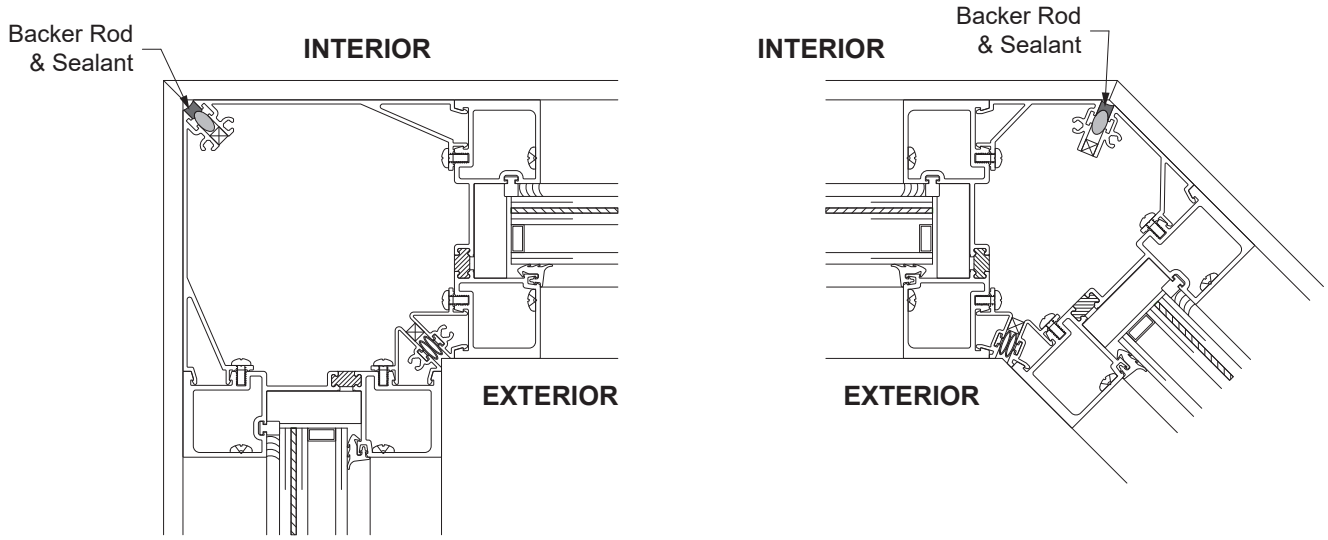

FRAME INSTALLATION

STEP 24
INSTALL INTERIOR COVERS

-For outside glazing units, snap the Y7-9599 interior filler onto the head member as shown in **Detail 53**.

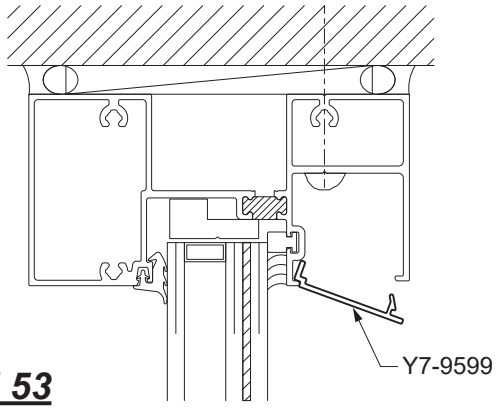

Detail 53
Outside Glazing

-For inside glazing units, seal the ends of the E9-0658 glass stop.

-Reinstall the glass stop and the removed head gasket, but leave the ends of the gasket out.

-Peel back the vertical gasket at the head and apply 1” of sealant in each direction between the glass and the aluminum framing as shown in **Detail 54**.

-Reinsert the end of the vertical gasket and then the ends of the head gasket. Seal the intersection of the head vertical gasket.

See **Detail 54A**.

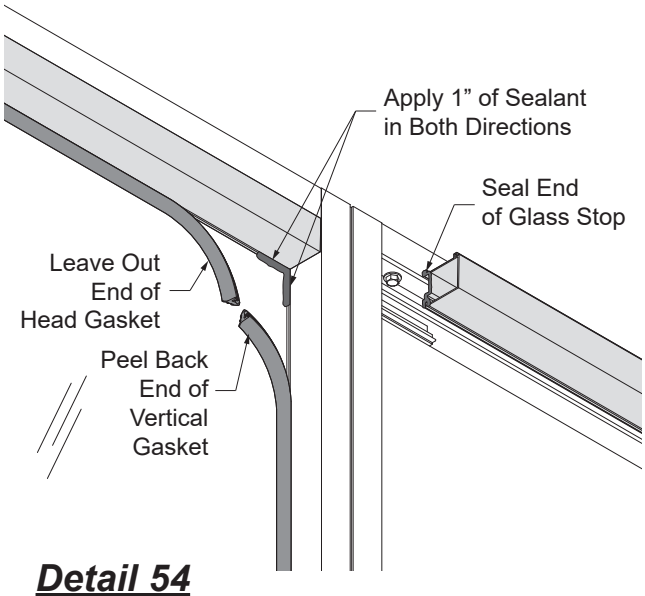

Detail 54
Inside Glazing

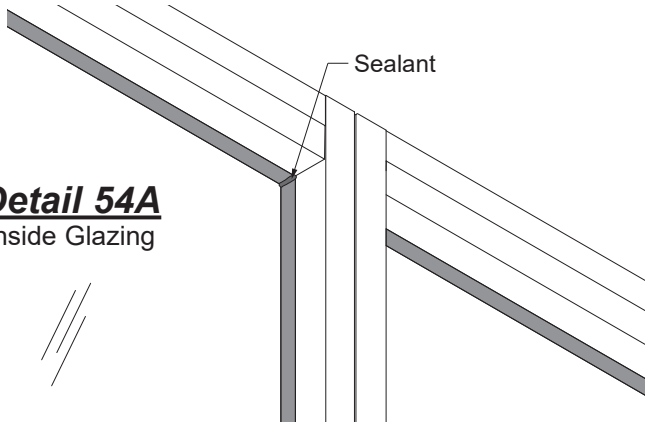

Detail 54A
Inside Glazing

FRAME INSTALLATION

STEP 24 (Continued)
INSTALL INTERIOR COVERS

-For all units, Just prior to installing interior face cover, fill the mullion void between each unit at the back of the sill flashing with sealant.

See **Detail 55**.

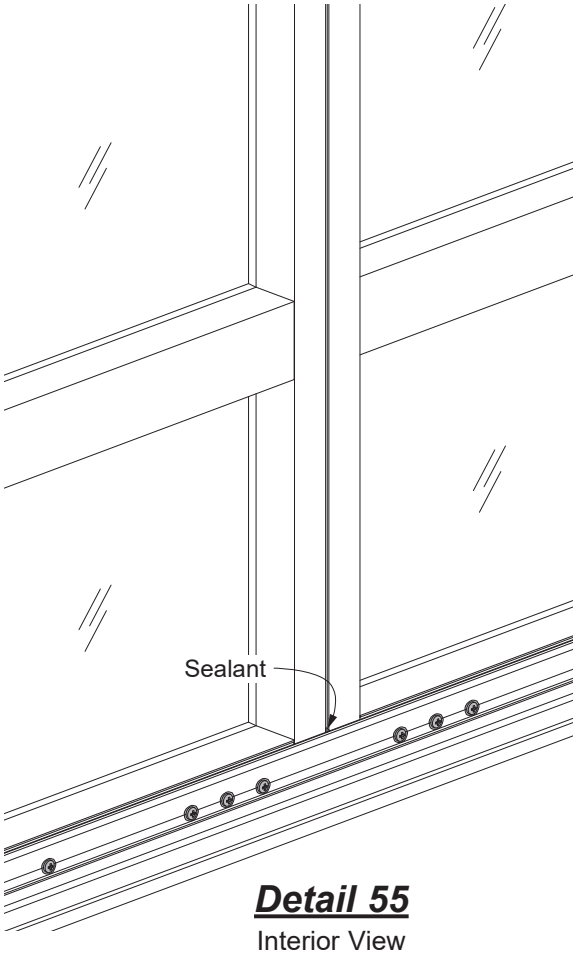

Detail 55
Interior View

-Fill the gap between the sill and the top of the sill flashing with continuous sealant, the full width of the sill flashing. Then, immedately snap the E9-6342 interior face cover onto the back of the sill flashing.

See **Detail 56**.

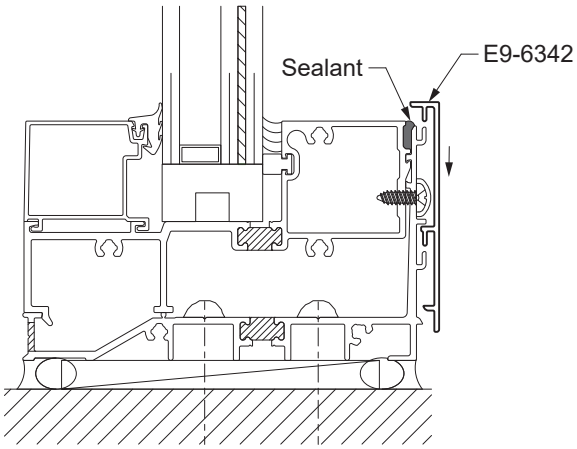

Detail 56
Outside Glazing Shown,
Inside Glazing Similar

FRAME INSTALLATION

STEP 25
SEAL AIR / WATER THRESHOLD

-Where air / water thresholds are used, apply continuous sealant along the back of the threshold as shown in **Detail 57**.

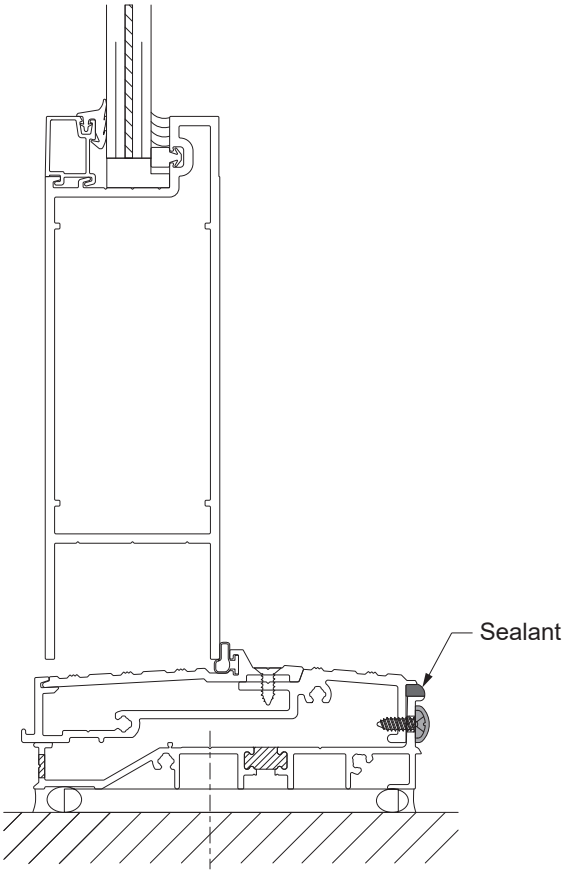

Detail 57

YKK AP America Inc.

101 Marietta Street NW
Suite 2100
Atlanta, Georgia 30303
www.ykkap.com