Swing Door Installation Manual

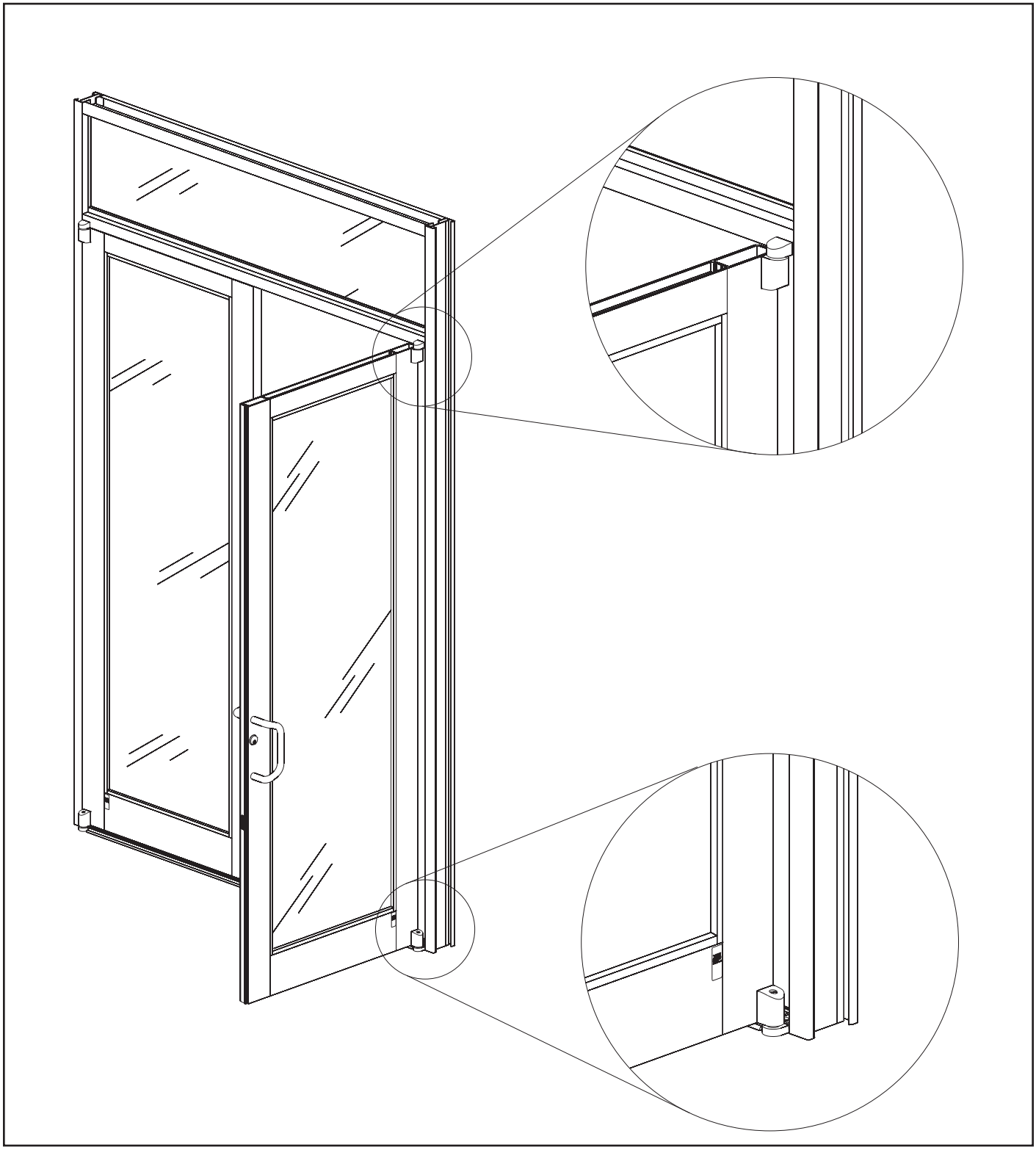

20D/35D/50D | 40M/50M | 25FD
25T/35T/50T

TABLE OF CONTENTS

Installation Notes ..... Page ii

Door Types ..... Pages 1 to 3

Cut Down Transom Frame ..... Page 4

Fabricate Frame For Header ..... Pages 5 to 8

Offset Pivot Frame Installation ..... Pages 9 to 12

Butt Hinge Frame Installation ..... Page 13

Center Pivot Frame Installation ..... Page 14

Calculate Transom Glass Size ..... Pages 15 to 19

Calculate Door Glass Size ..... Page 20

Install Overhead Concealed Closer In Offset Pivot and Butt Hinge Frames ..... Page 21

Install Optional Bottom Offset Pivot ..... Page 22

Glaze The Door ..... Page 23

Install Smart Series Push/Pull Hardware ..... Page 24

Install Offset Pivot Door Into Frame ..... Page 25

Install Butt Hinge Door Into Frame ..... Page 25

Install Center Pivot Door Into Frame ..... Page 26

Adjust Weather Astragal For Pair of Doors ..... Page 26

Install Door Sweeps ..... Page 27

Installation Notes

1. Do not drop, roll or drag boxes of aluminum framing. Move and stack boxes with proper support to prevent distortion. If fork lifts are used be especially careful about striking the boxes when lifting or moving.

2. Store in a dry, out of the way area. If rain exposure, condensation or any water contact is likely, then all packaging material should be removed. Wet packaging materials will discolor and may stain aluminum finishes and paints.

3. All materials should be checked for quantity and quality upon receipt, YKK AP must be notified immediately of any discrepancies in shipment. Check to make sure that you have the required shims, sealants, supplies and tools necessary for the installation.

4. Carefully check the openings and surrounding conditions that will receive your material. Remember, if the construction is not per the construction documents, it is your responsibility to notify the general contractor in writing. Any discrepancies must be brought to the general contractor's attention before you proceed with the installation.

5. Gather your shop drawings, materials, packing list and this installation manual. Carefully review parts location, the sequence it goes therein when you glaze it and how you seal it. Installation instructions are of a general nature and may not cover every condition you encounter. The shop drawings and/or installation manuals were prepared specifically for the product.

6. Any material substitutions must be of equal or greater quality.

7. Make certain that material samples have been sent for compatibility testing for all manufacturer's sealants involved. Make certain that sealants have been installed in strict accordance with the manufacturer's recommendations and specifications.

8. Remember to isolate, in an approved manner, all aluminum from uncured masonry or other incompatible materials.

9. System-to-structure fasteners are not supplied by YKK AP. Fasteners called out on shop drawings are to indicate minimum sizes for design loading.

10. **Entrance frames and doors are to be installed plumb, square, and level.**

11. If any questions arise concerning YKK AP products or their installation, contact YKK AP for clarification before proceeding.

12. YKK AP store front and/or curtain wall framing is typically completed before drywall, flooring and other products that may still be in process. Take the extra time to wrap and protect the work produced.

13. Cutting tolerances are plus zero (0"), minus one thirty second (-1/32") unless otherwise noted.

14. Check our website, www.ykkap.com, for the latest installation manual update prior to commencing work.

This manual applies to the door types listed below.

STANDARD DOOR

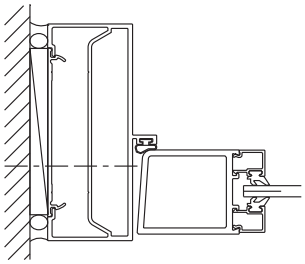

20D

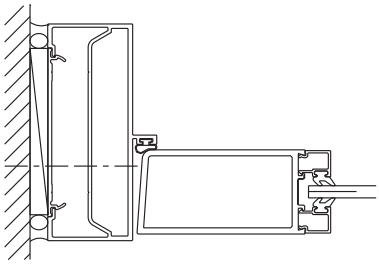

35D

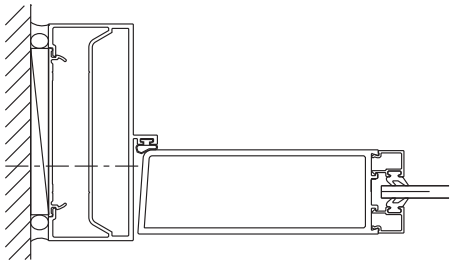

50D

MONUMENTAL DOOR

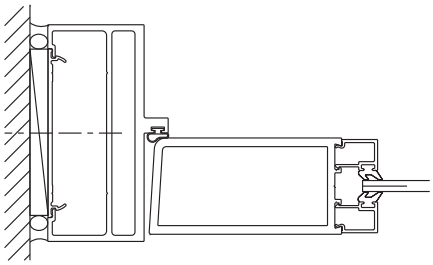

40M

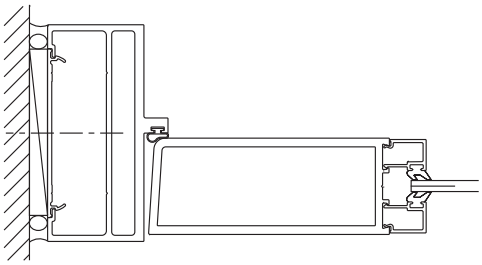

50M

FLUSH PANEL DOOR

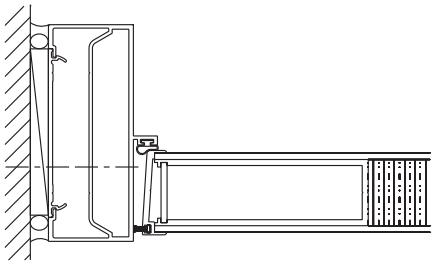

25FD

This manual applies to the door types listed below. (Continued)

MEGATHERM® T ENTRANCES

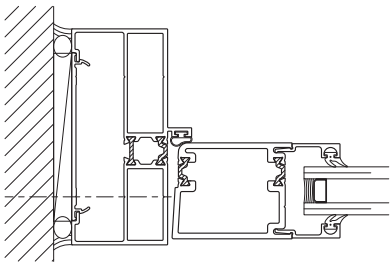

25T

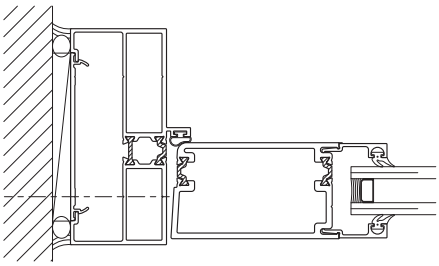

35T

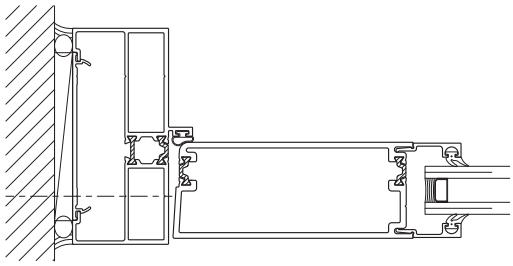

50T

YKK AP entrances can also be mounted into YKK AP curtain wall systems via door jamb adaptor subframes.

POCKET SUBFRAME

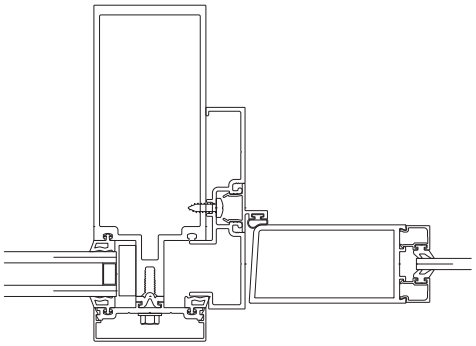

YCW 750 OG Glazed-in Subframe
w/ 35D Door Shown

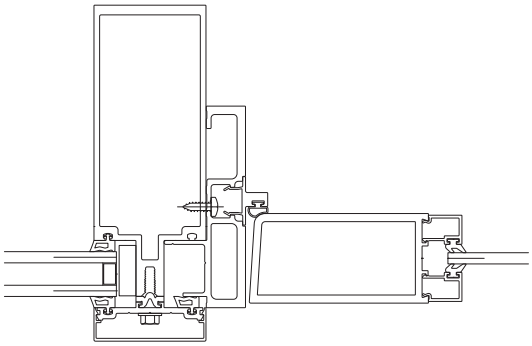

YCW 750 OG Heavy Duty Glazed-in
Subframe w/ 40M Door Shown

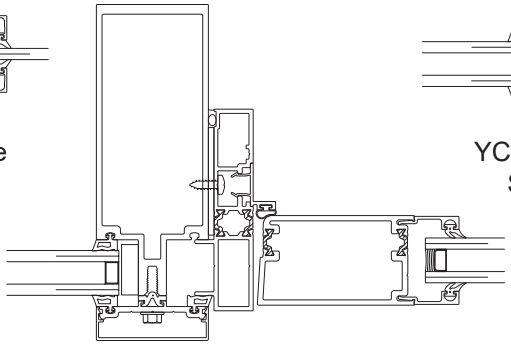

YCW 750 OG Glazed-in Subframe
w/ 35T Door Shown

FLAT SUBFRAME

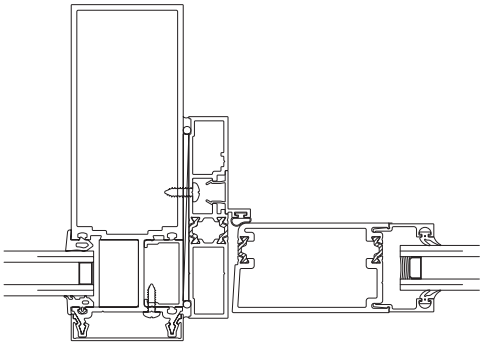

YCW 750 IG Applied Subframe
w/ 35T Door

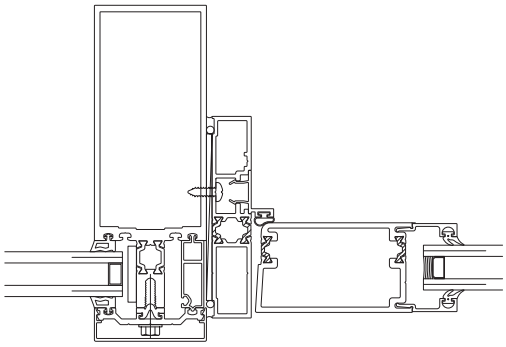

YCW 750 XT Applied Subframe
w/ 35T Door Shown

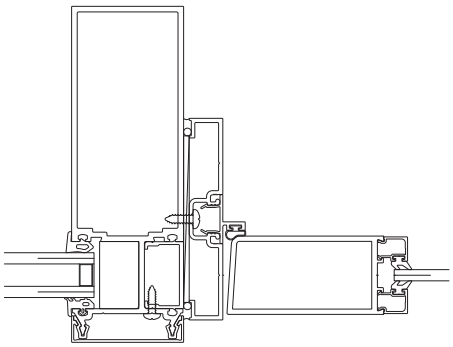

YCW 750 IG Applied Subframe
w/ 35D Door

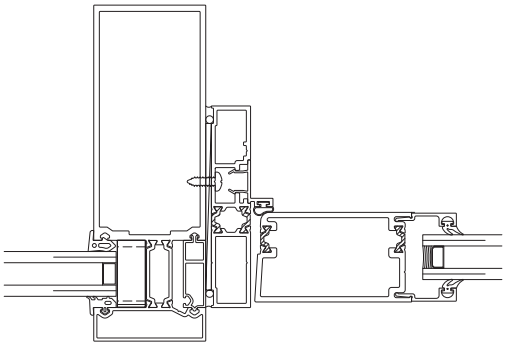

YCW 750 XT IG Applied Subframe
w/ 35T Door

STEP 1
CUT DOWN TRANSOM FRAME
(For non-transom frames, proceed directly to Step 3)

Measure the height of each rough opening that is to receive a door frame. If there are several different frame heights, it will be necessary to label each frame.
-Deduct 3/8” from the height of the rough opening to determine the frame size.
-Slide the transom glazing pocket up so that it is flush with the end of the frame.
-Mark the frame height on the frame jambs by measuring up from the bottom of the frame.
See **Detail 1**.

-Cut the frame and the transom glazing pocket.
-Slide the transom glazing pocket back down into position.
See **Detail 2**.

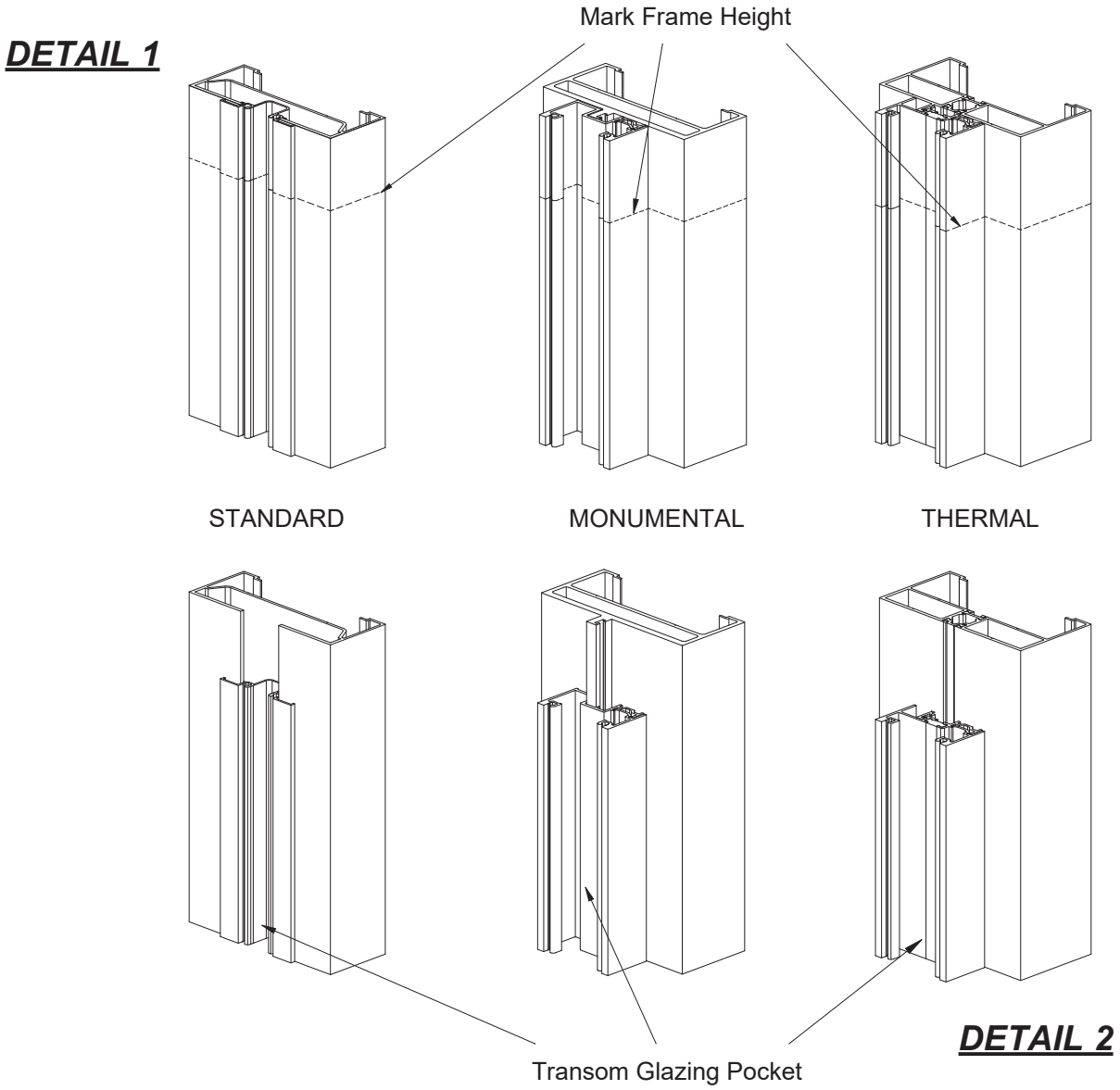

STEP 2
FABRICATE FRAME FOR HEADER

-Measure down from the top of the frame dimension “A”, see the table below.
-Mark the spot on each “V-Groove” for the holes required to attach header.
-Drill a 0.238” diameter hole (#B drill bit) through both the web and the front of the jamb, at each location marked.
See **Detail 3**.

-Drill 1/2” diameter access holes in web only, centered on the first holes drilled, to permit the head of the fasteners to pass through the web.

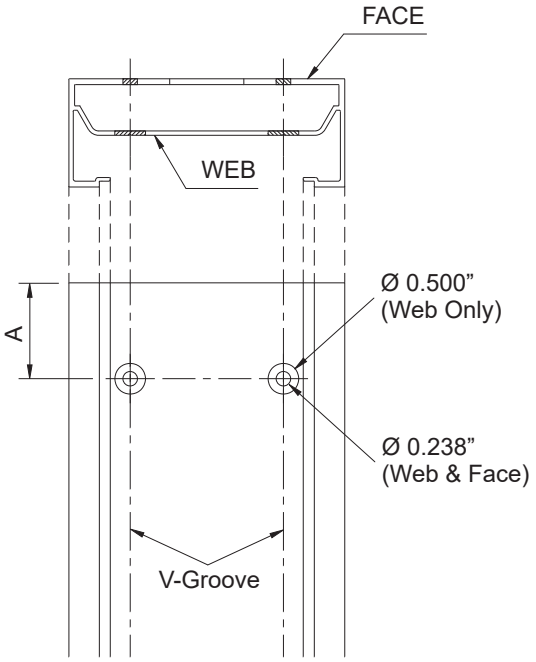

DETAIL 3

*MegaTherm T similar

Member	Dimension A	System
1-3/4" Header	1-9/16"	FS
2" Header	1-13/16"	FI/TU/XT
2-1/4" Header	2-1/16"	FT

STEP 2A
FABRICATE CURTAIN WALL SUBFRAMES

Installation of the curtain wall subframes is hardware and job specific. These instructions will focus on the most commonly used subframe members. For fabrication of fastener holes to anchor the subframe into the curtain wall framing, refer to your approved shop drawings or P.E. calculations.

-Subframe jambs are cut to Door Opening Height plus the door header dimension as shown in **Details 4, 5, & 6**.
-Snap-in door stops are cut to Door Opening Height and notched as shown.

Note: Curtain wall subframes do not have transoms.

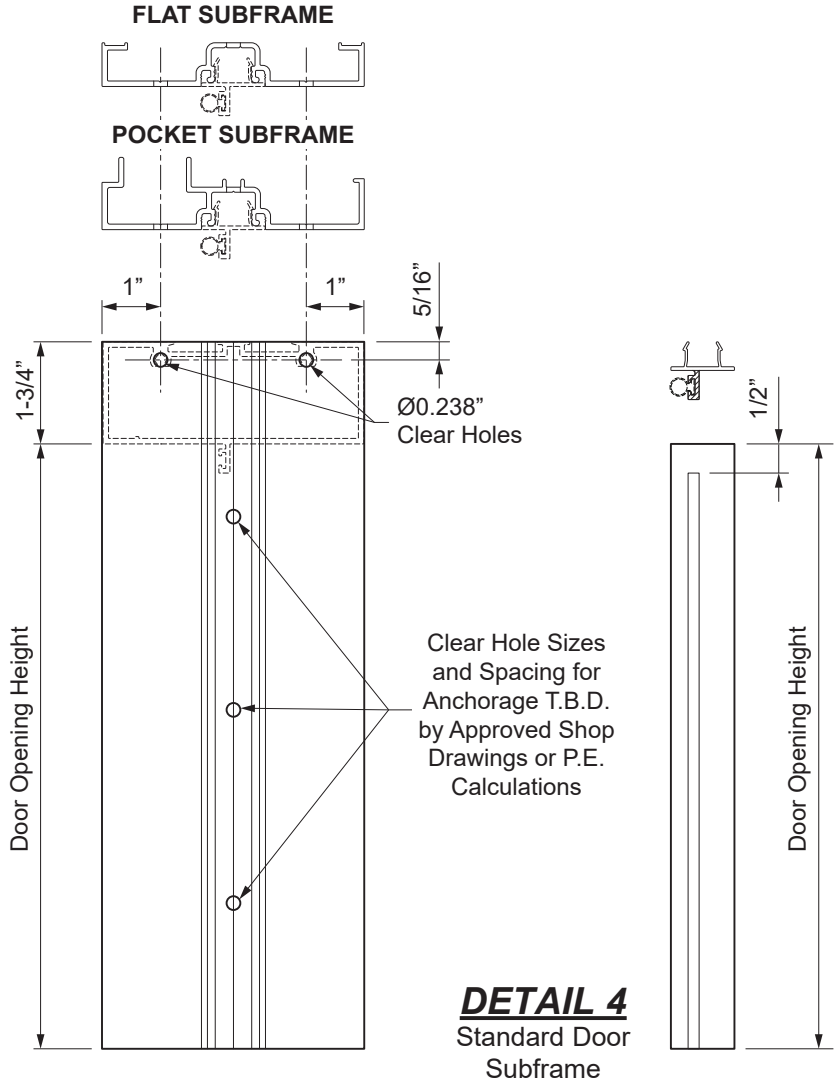

Door subframe headers are cut to Door Opening Width. Refer to the approved shop drawings to determine anchor hole size and spacing. Note that any holes for exposed fasteners will have to be counter sunk.

STEP 2A (Continued)
FABRICATE CURTAIN WALL SUBFRAMES

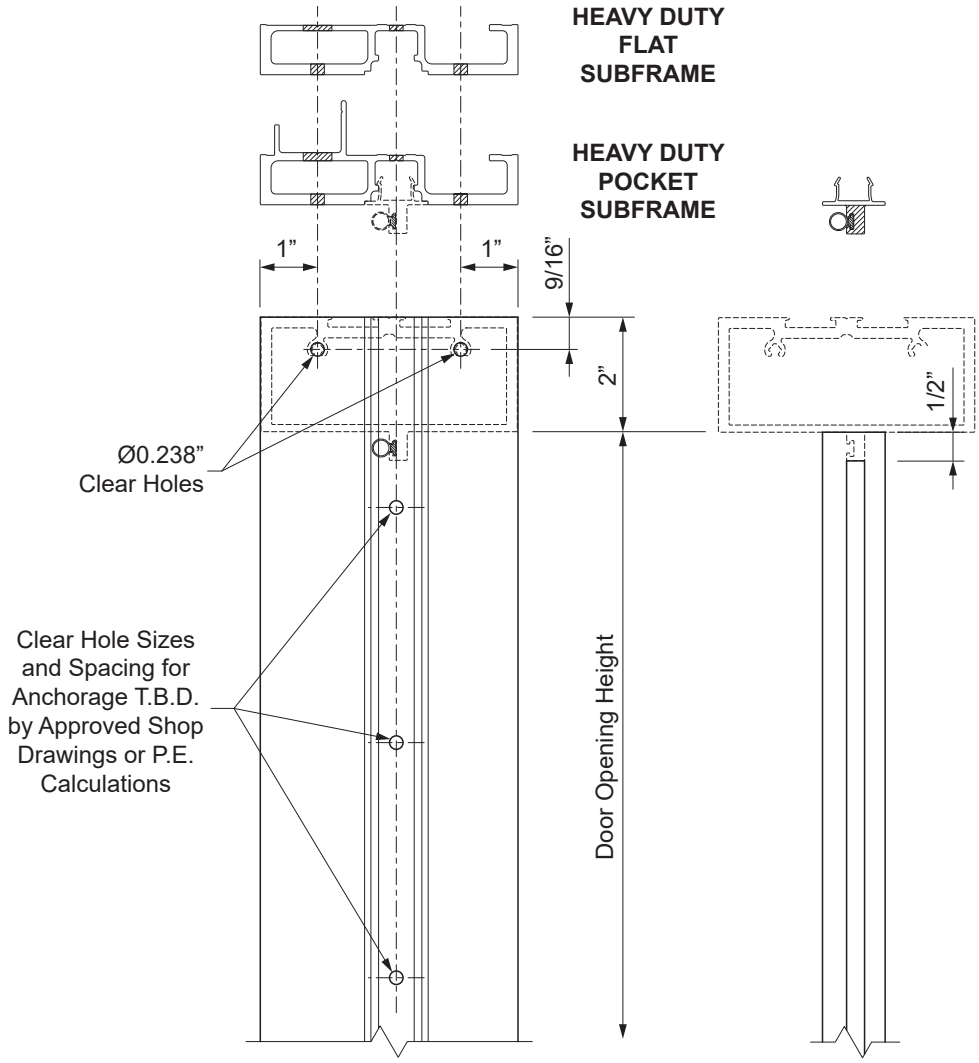

DETAIL 5
Heavy Duty
Door Subframe

STEP 2A (Continued)
FABRICATE CURTAIN WALL SUBFRAMES

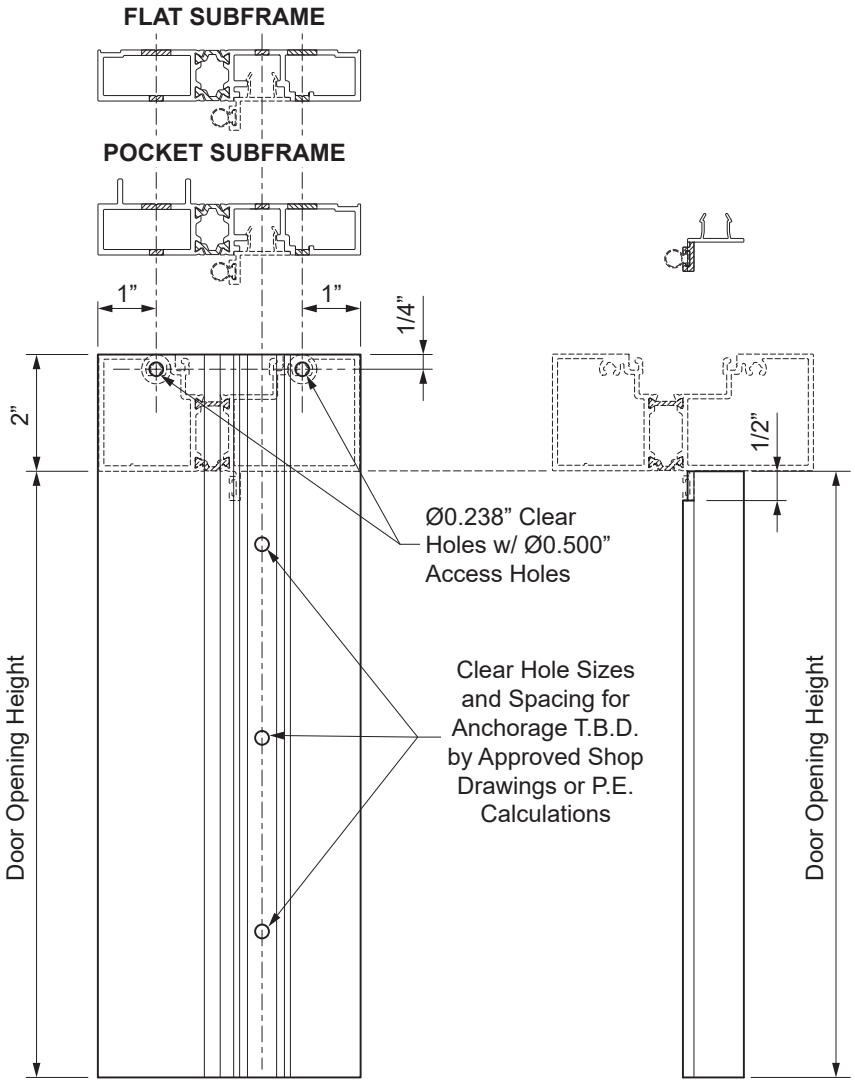

DETAIL 6
Thermal Door Subframe

STEP 3
OFFSET PIVOT FRAME INSTALLATION

-Remove the offset pivot frame packages from the door carton through the cut-out provided.

Top Pivot Package:	Accessories: (1) top pivot frame portion E1-0303. Screws: (3) FM-1210 finish to match pivot.
Bottom Pivot Package:	Accessories: (1) bottom pivot frame portion: E1-0300(RH), E1-0301(LH). (1) Plastic anchor plug. Screws: (2) FM-1210 finish to match pivot. (2) UM-1208-SS Stainless Steel.

-Remove from the frame carton the frame accessory package:

Singles and pairs:	Accessories: (3) plastic anchor plugs, (2) setting blocks for transom lite: E2-0019 for 1/4” glass or E2-0020 for 1” glass. Screws: (3) FC-1228, (4 or 8) PC-1216 (8 for transom).
Single door frames only:	Accessories: (1) threshold clip E1-0307. Screws: (2) FM-1210 to match pivot, (2) UM-1208-SS Stainless Steel.

-Attach bottom pivot and threshold clip to frames.
-Attach top pivot to the transom bar.
-Assemble frame as shown.
See **Details 7, 8, and 9**.

Install the frame into the opening:
- -Anchor bottom pivot to the opening.
- -Shim if required.
- -Attach the threshold to the frame set in bed of sealant.
- -Shim and anchor frame so that it is plumb,square, and level.

-Caulk the perimeter of the frame with sealant.

Glaze the transom lite (for storefront frames):
(See **Pages 15 to 19** to calculate Transom Glass Sizes)
-Snap into place the interior transom glass stop.
-Install interior glazing gasket in the transom.
-Install setting blocks at quarter points.
-Carefully install the transom lite.
-Snap into place the exterior transom glass stop.
-Install exterior gasket.

STANDARD OFFSET PIVOT FRAME

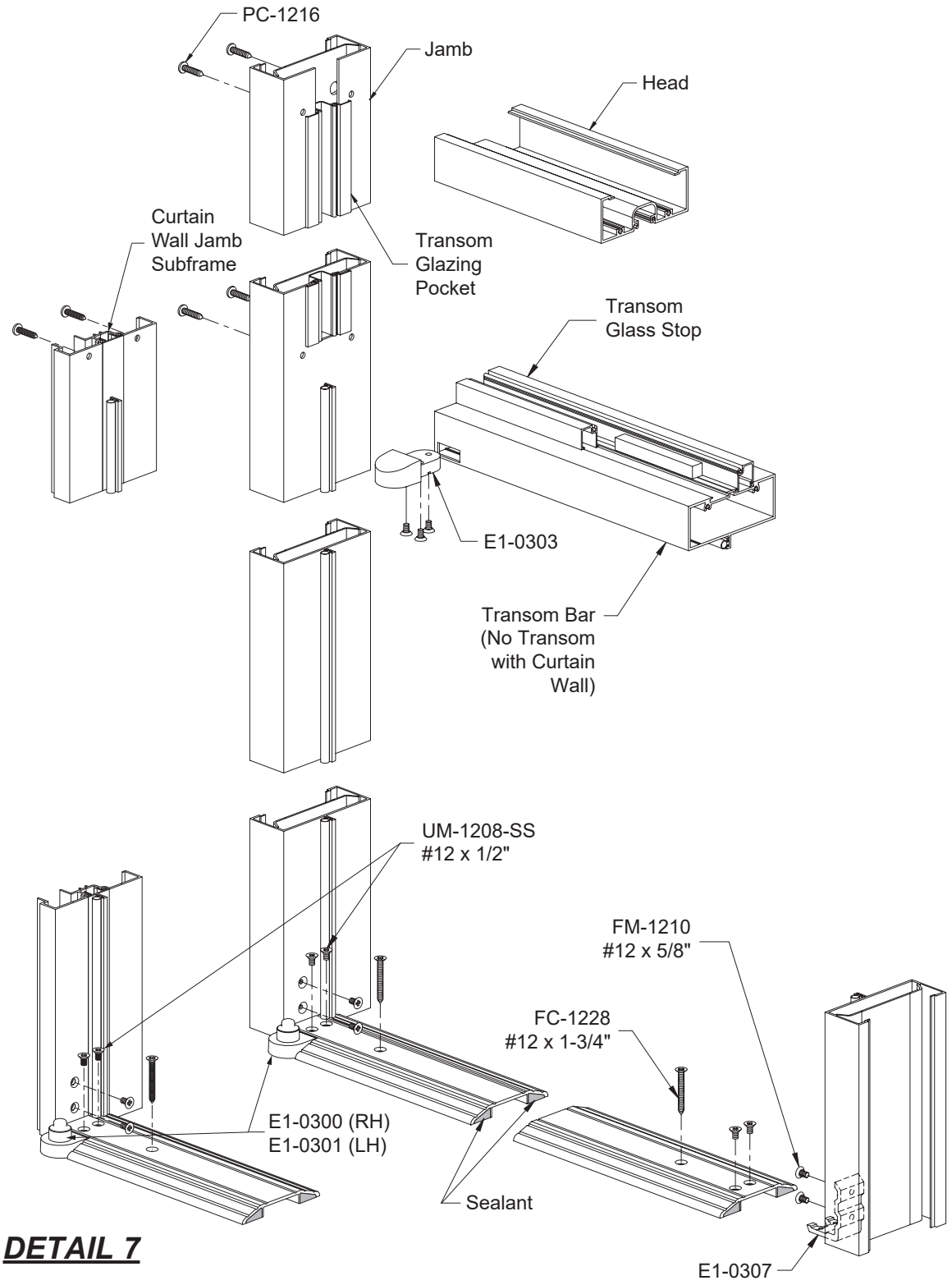

DETAIL 7

MONUMENTAL OFFSET PIVOT FRAME

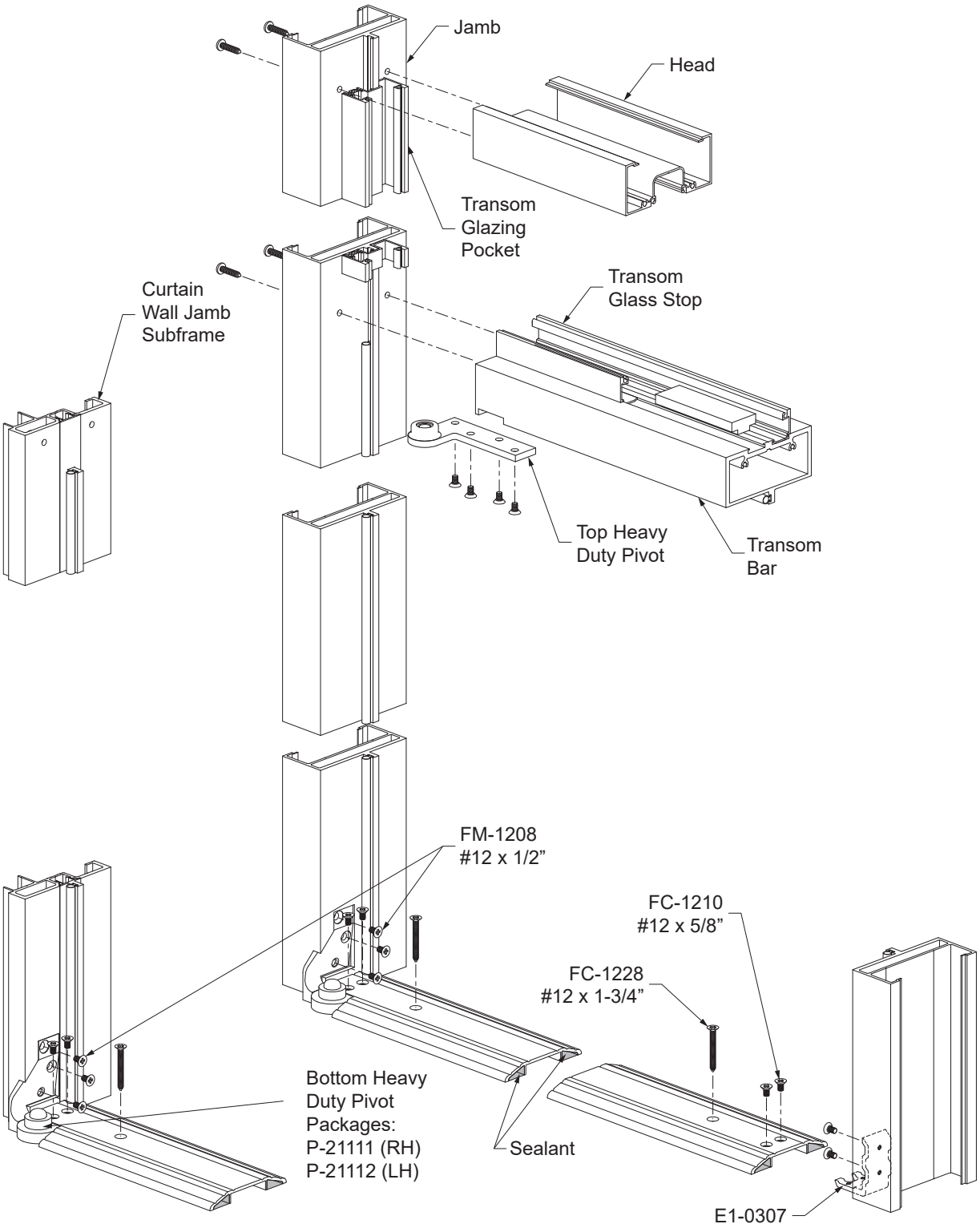

DETAIL 8

THERMAL OFFSET PIVOT FRAME

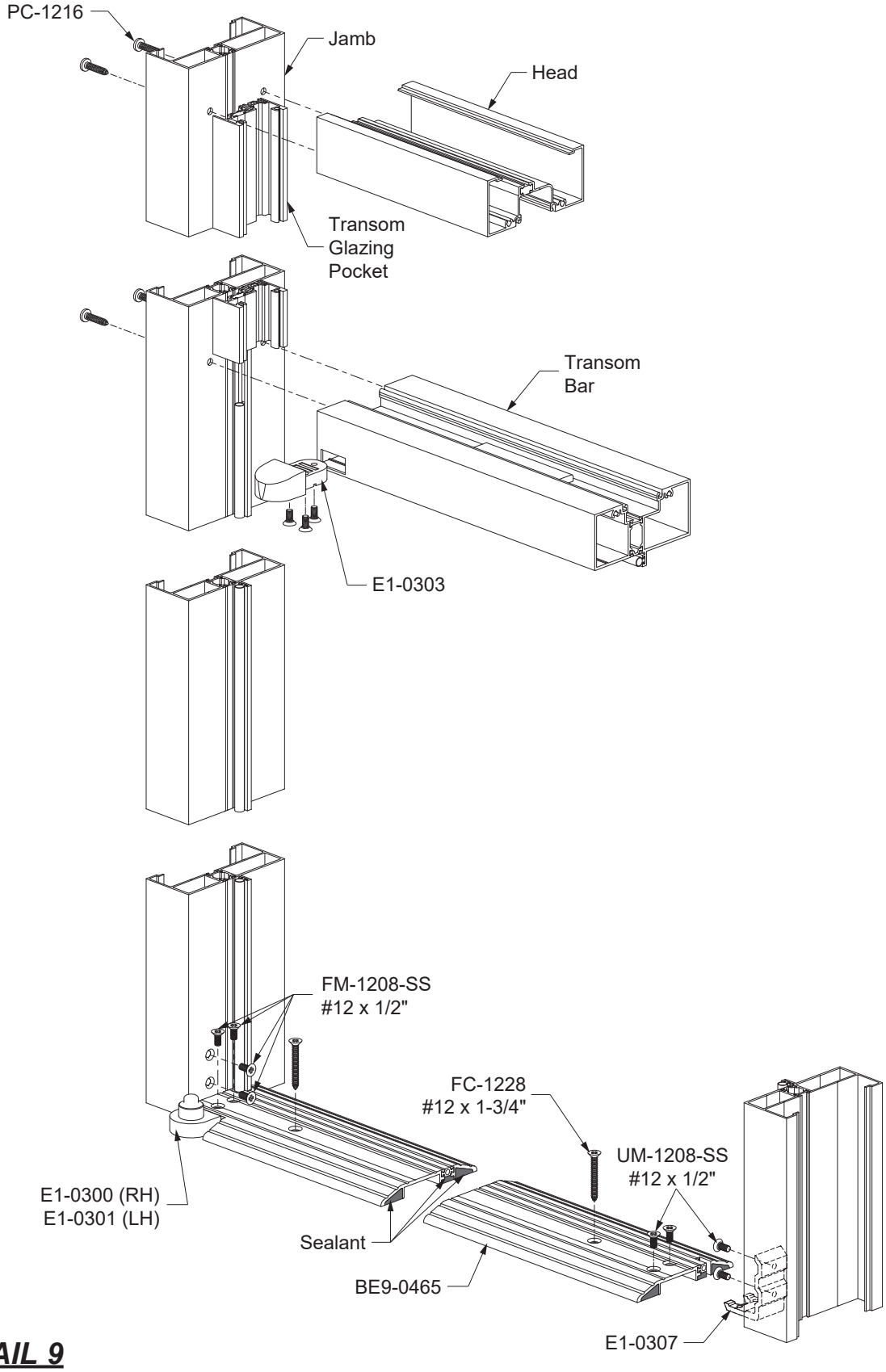

DETAIL 9

STEP 3
BUTT HINGE FRAME INSTALLATION

-Remove the offset pivot frame packages from the door carton through the cut-out provided.

Accessories: (2) threshold clips E1-0307*, (3) plastic anchor plugs, (2) setting blocks for transom lites: E2-0019 for 1/4” glass or E2-0020 for 1” glass.

Fasteners: (3) FC-1228 FHSMS, (8) FM-1206 (4 to match frame & 4 mill finish, and (4) or (8) PC-1216 fasteners (8 for transom frames).

-Attach the threshold clips to the frame.
-Assemble frame as shown.
See **Detail 10**.

** **Note:** Standard Jamb/Subframe shown, 40M/50M, and 35T/35T/50T Jamb / Subframe similar.

Install the frame into the opening:
- -Attach the threshold to the frame set in bed of sealant.
- -Shim and anchor frame so that it is plumb, square, level, and true.

-Caulk the perimeter of the frame with sealant.

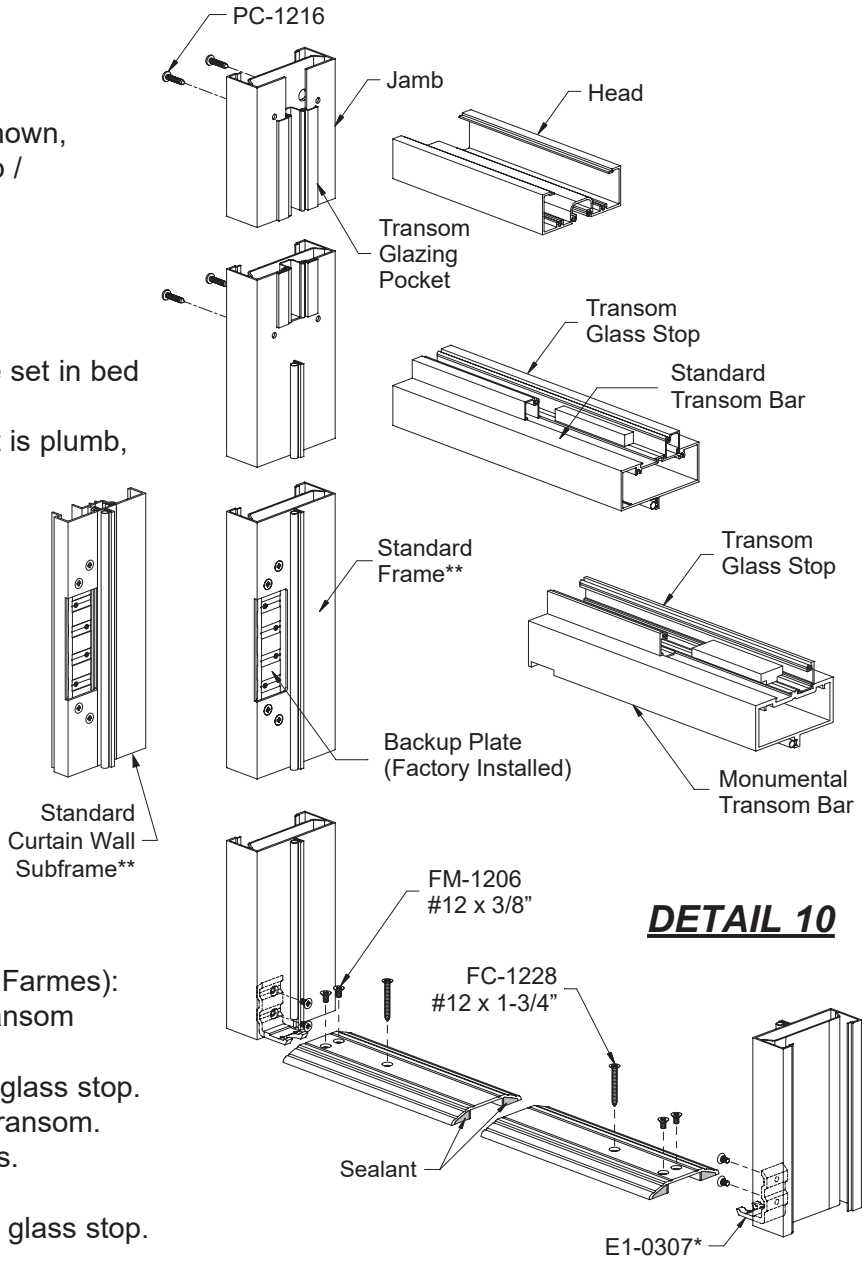

DETAIL 10

Glaze the transom lite (for Storefront Farmes):
(See **Pages 15 to 19** to calculate Transom Glass Sizes)
-Snap into place the interior transom glass stop.
-Install interior glazing gasket in the transom.
-Install setting blocks at quarter points.
-Carefully install the transom lite.
-Snap into place the exterior transom glass stop.
-Install exterior gasket.

STEP 3
CENTER PIVOT FRAME INSTALLATION

-Remove from the frame carton the accessory package:

Accessories: (2) Threshold clips, (3) plastic anchor plugs, (1) transom bar/closer shear block (2 for pair of doors), (1) transom bar shear block: E1-0317 for 4 1/2” frames or E1-0326 for 4” frames for single doors, (1) closer anchor clip, (1) bottom pivot assembly, (2) setting blocks for transom lites: E2-0019 for 1/4” glass or E2-0020 for 1” glass.

Fasteners For Frame: (8) FM-1206 and (3) FC-1228 to attach threshold clips and threshold, (4) PC-1216 to attach headers (transom frames only), (2) PC-1228 to attach the E1-0326 or E1-0317 and (2) FC-1008 to attach the T-Bar (single door frames only).

Fasteners For Closer: (2) 1/4–20 x 1/2” HHMS bolts with lock washers, (3) 1/4–20 x 1/2” PHMS bolts, (2) 1/4–20 x 1-1/4” FHMS, and (6) FM-1006.

Note: Last five items doubled for frames for pairs of doors.

-Assemble the threshold clips to the frame.
-Assemble the bottom pivot(s) to the threshold.
-Assemble frame as shown.
See **Detail 11**.

DETAIL 11

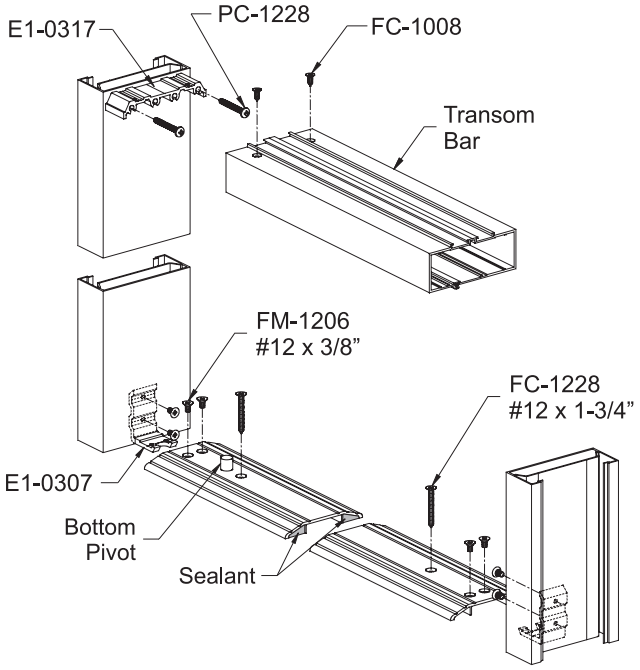

Install the frame into the opening:
- -Attach the threshold to the frame set in bed of sealant.
- -Shim and anchor frame so that it is plumb, square, level, and true.

-Caulk the perimeter of the frame with sealant.
-Install the overhead door closer(s).
See **Detail 12** and the instructions in the closer box.
-Attach cover plate(s).

Glaze the transom lite:
(See **Pages 15 to 19** to calculate Transom Glass Sizes)
-Snap into place the interior transom glass stop.
-Install interior glazing gasket in the transom.
-Install setting blocks at quarter points.
-Carefully install the transom lite.
-Snap into place the exterior transom glass stop.
-Install exterior gasket.

DETAIL 12

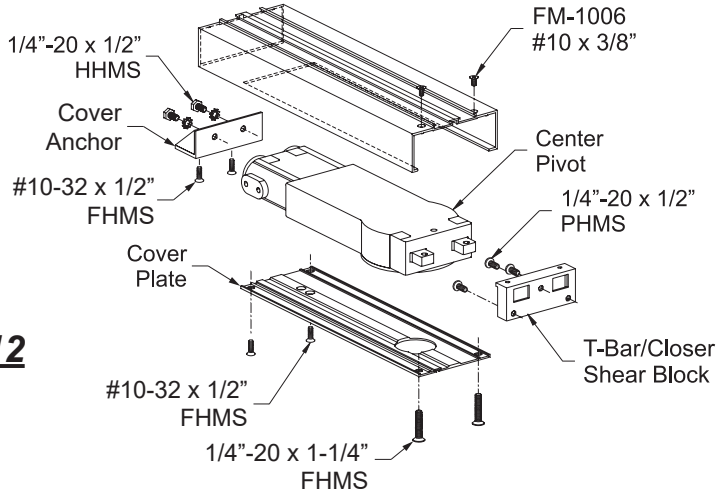

Calculate Transom Glass Sizes:

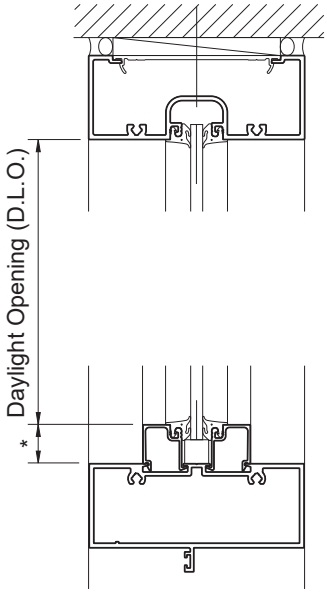

DETAIL 13
1/4” Glazing Shown
1” Glazing Similar

Standard Door

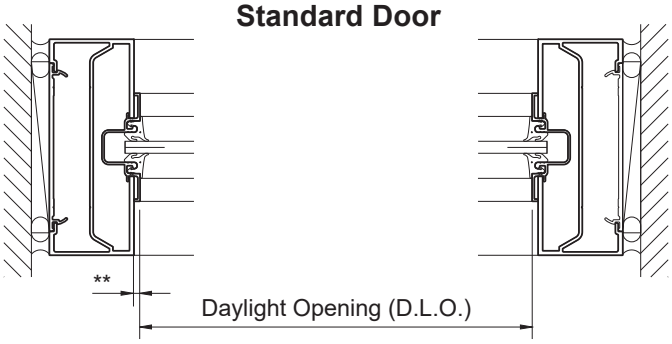

** 1/4” Glazing Pocket = 1/8”
1” Glazing Pocket = 1/2”

* Single Glazing (Offset Pivot) = 13/16”
Single Glazing (OHCC) = 15/16”
Insulating Glazing = 1”

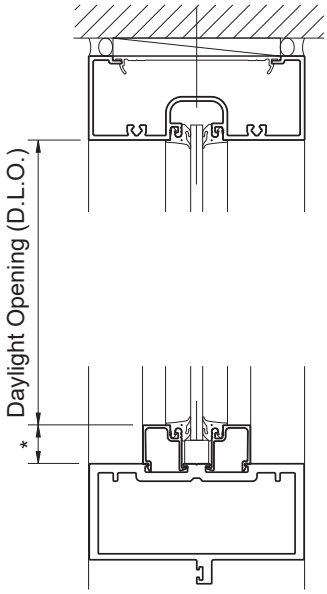

Monumental Door

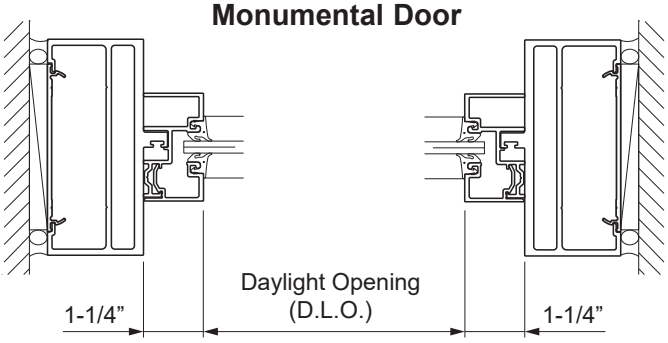

DETAIL 14
1/4” Glazing Shown
1” Glazing Similar

Transom Glass Size Formula

TYPE	YES 40 FS/FI	YES 45 FS/FI YES 60 FI	YES 45 TU YES 60 TU	YES 45 FT	YES 45 XT YES 60 XT
Width for Single Glass	D.L.O. +(plus) 5/8"	D.L.O. +(plus) 5/8"	D.L.O. +(plus) 7/8"	D.L.O. +(plus) 7/8”	D.L.O. +(plus) 3/4"
Height for Single Glass	D.L.O. +(plus) 5/8"	D.L.O. +(plus) 5/8"	D.L.O. +(plus) 13/16"	D.L.O. +(plus) 7/8”	D.L.O. +(plus) 13/16"
Width for Insulating Glass	D.L.O. +(plus) 7/8"	D.L.O. +(plus) 7/8"	D.L.O. +(plus) 7/8"	D.L.O. +(plus) 7/8”	D.L.O. +(plus) 3/4"
Height for Insulating Glass	D.L.O. +(plus) 7/8"	D.L.O. +(plus) 7/8"	D.L.O. +(plus) 13/16"	D.L.O. +(plus) 7/8”	D.L.O. +(plus) 13/16"

Calculate Transom Glass Sizes (Cont):

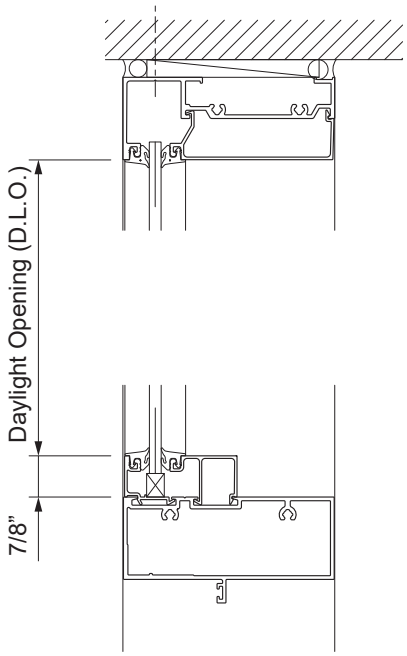

Standard Door (YWW 45 FS Only)

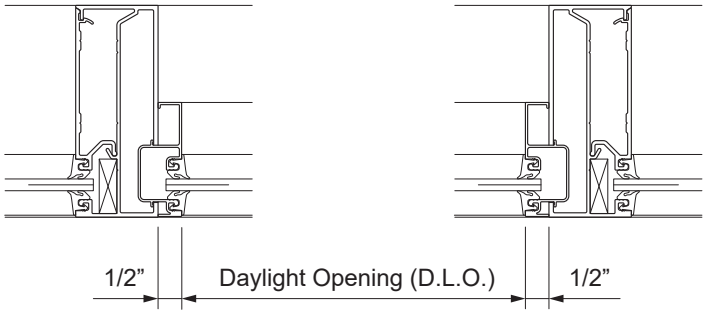

DETAIL 15

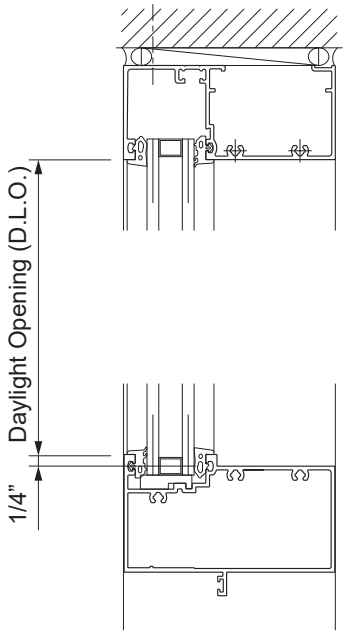

Standard Door (YWW 45 FI/TU/T, YWW 50 T Similar)

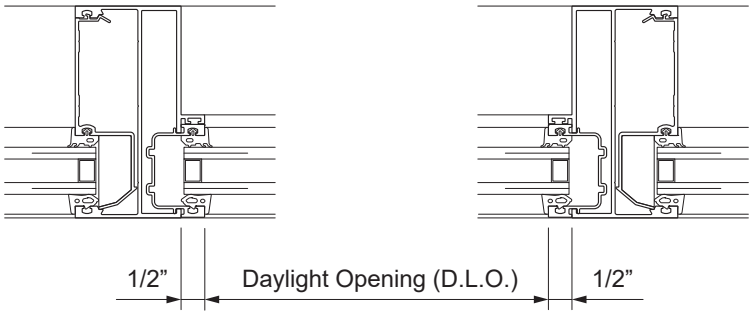

DETAIL 16

1” Glazing Shown
1/4” Glazing Similar

TYPE	YWW 45 FS	YWW 45 FI/TU	YWW 45 T	YWW 50 T
Width for Single Glass	D.L.O. +(plus) 3/4"	D.L.O. +(plus) 7/8"	D.L.O. +(plus) 1"	D.L.O. +(plus) 1"
Height for Single Glass	D.L.O. +(plus) 3/4"	D.L.O. +(plus) 7/8"	D.L.O. +(plus) 15/16"	D.L.O. +(plus) 7/8"
Width for Insulating Glass	-	D.L.O. +(plus) 7/8"	D.L.O. +(plus) 1"	D.L.O. +(plus) 1"
Height for Insulating Glass	-	D.L.O. +(plus) 7/8"	D.L.O. +(plus) 15/16"	D.L.O. +(plus) 7/8"

Calculate Transom Glass Sizes (Cont):

Standard Door for YES 60 TU Front Set

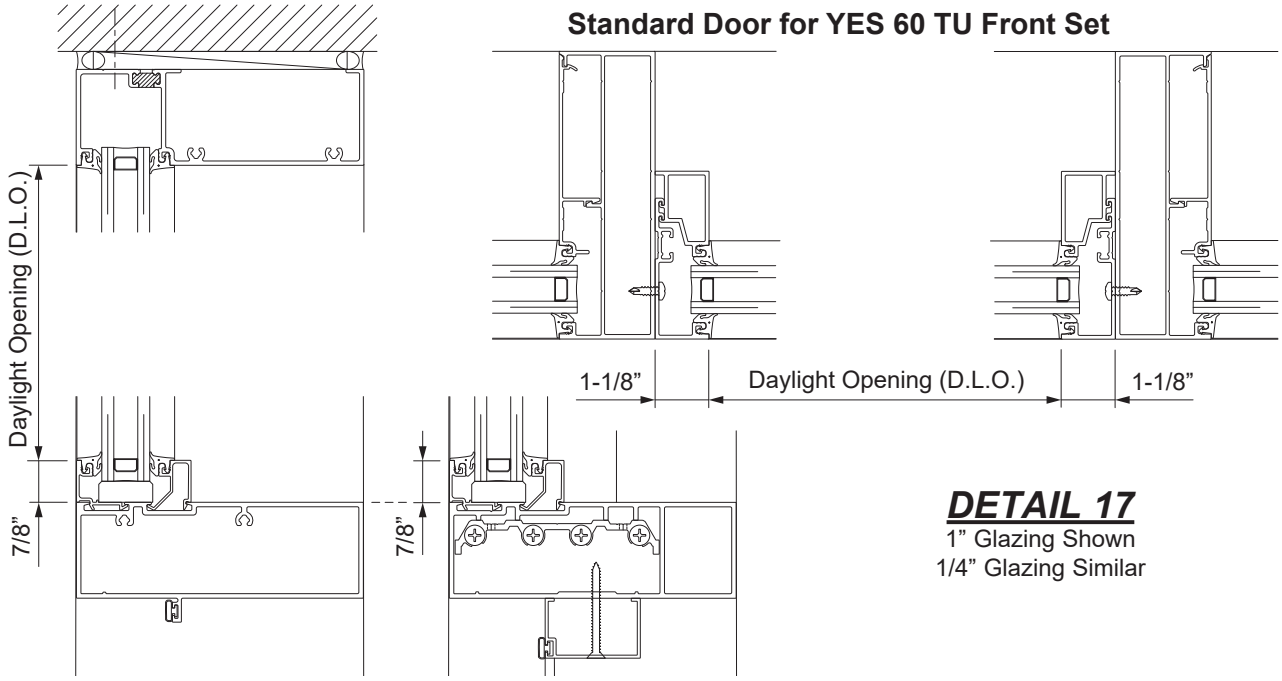

DETAIL 17
1” Glazing Shown
1/4” Glazing Similar

Monumental Door for YES 60 TU Front Set

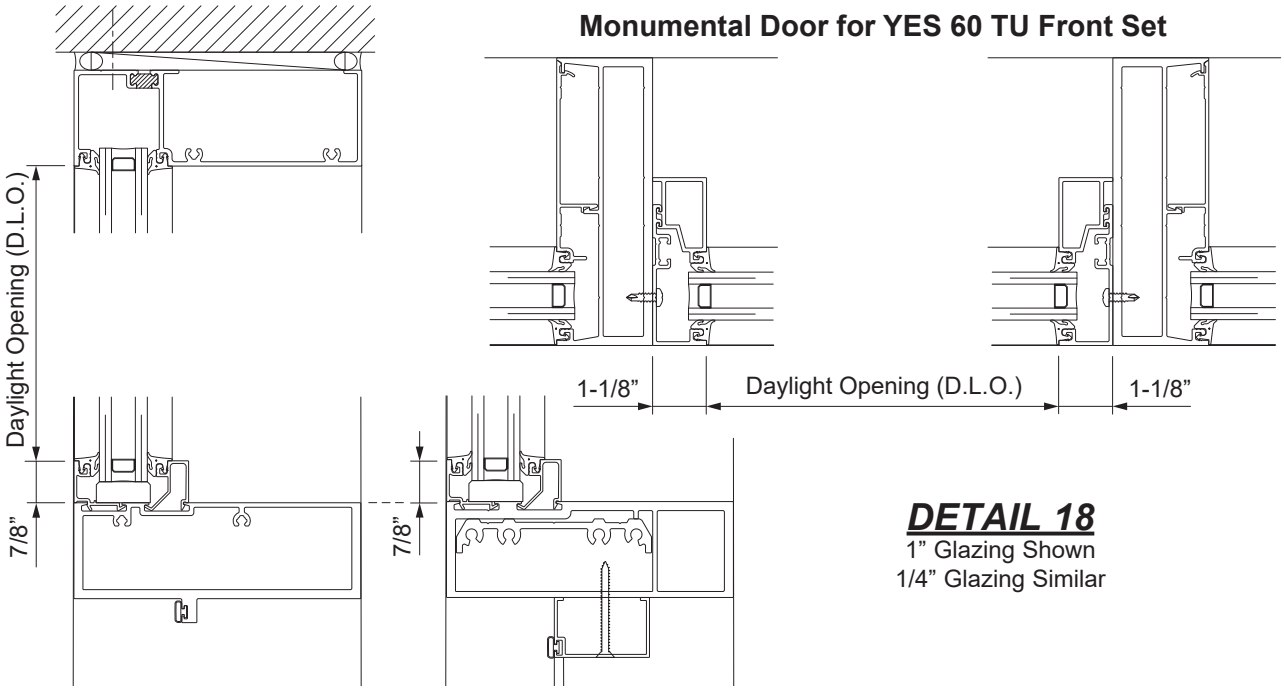

DETAIL 18
1” Glazing Shown
1/4” Glazing Similar

TYPE	YES 60 TU Front Set			
Width for Single Glass	D.L.O. +(plus) 3/4"			
Height for Single Glass	D.L.O. +(plus) 13/16"			
Width for Insulating Glass	D.L.O. +(plus) 3/4"			
Height for Insulating Glass	D.L.O. +(plus) 13/16"			

Calculate Transom Glass Sizes (Cont):

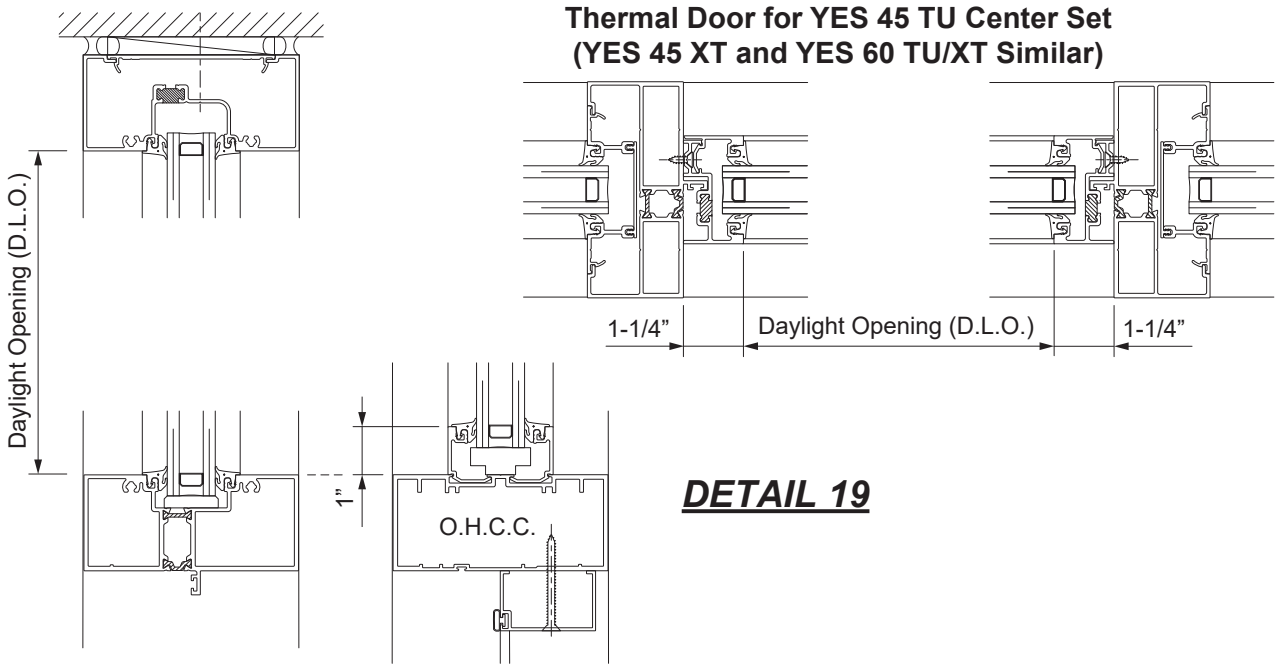

DETAIL 19

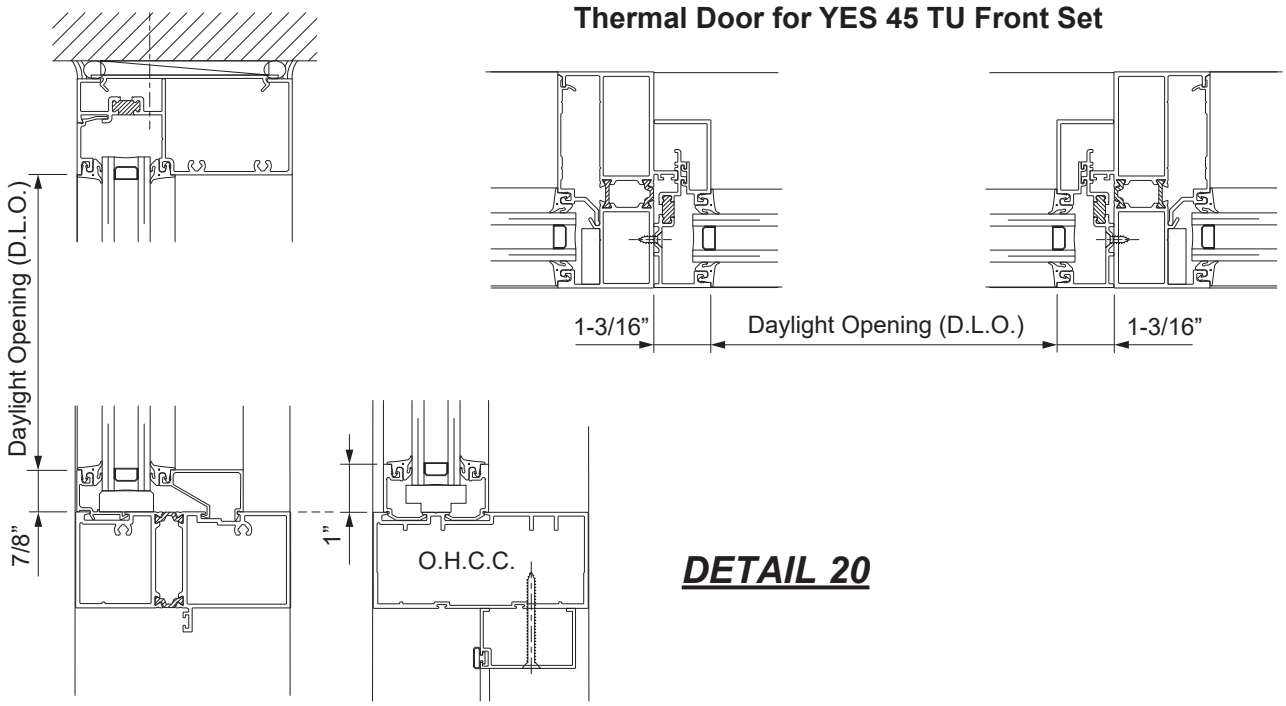

DETAIL 20

TYPE	YES 45/60 TU/XT Center Set	YES 45 TU Front Set		
Width for Insulating Glass	D.L.O. +(plus) 7/8”	D.L.O. +(plus) 7/8"		
Height for Insulating Glass	D.L.O. +(plus) 13/16”	D.L.O. +(plus) 3/4"		

Calculate Transom Glass Sizes (Cont):

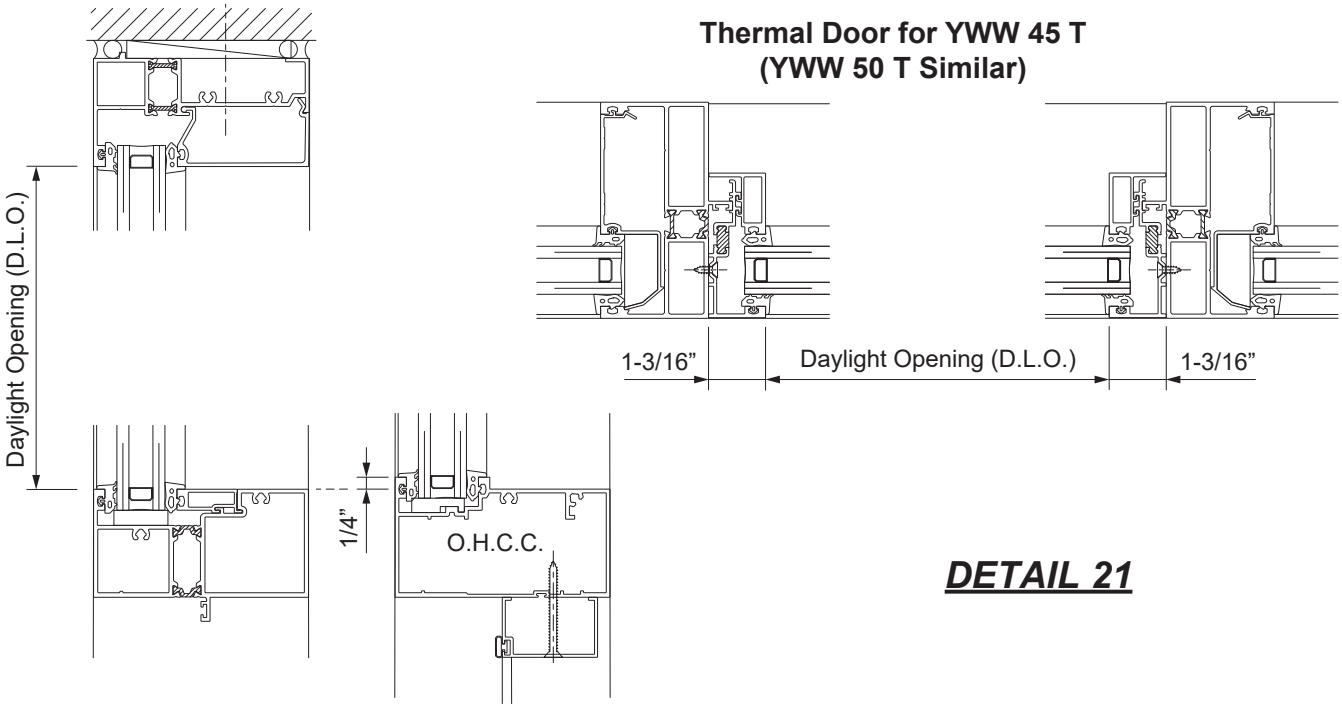

DETAIL 21

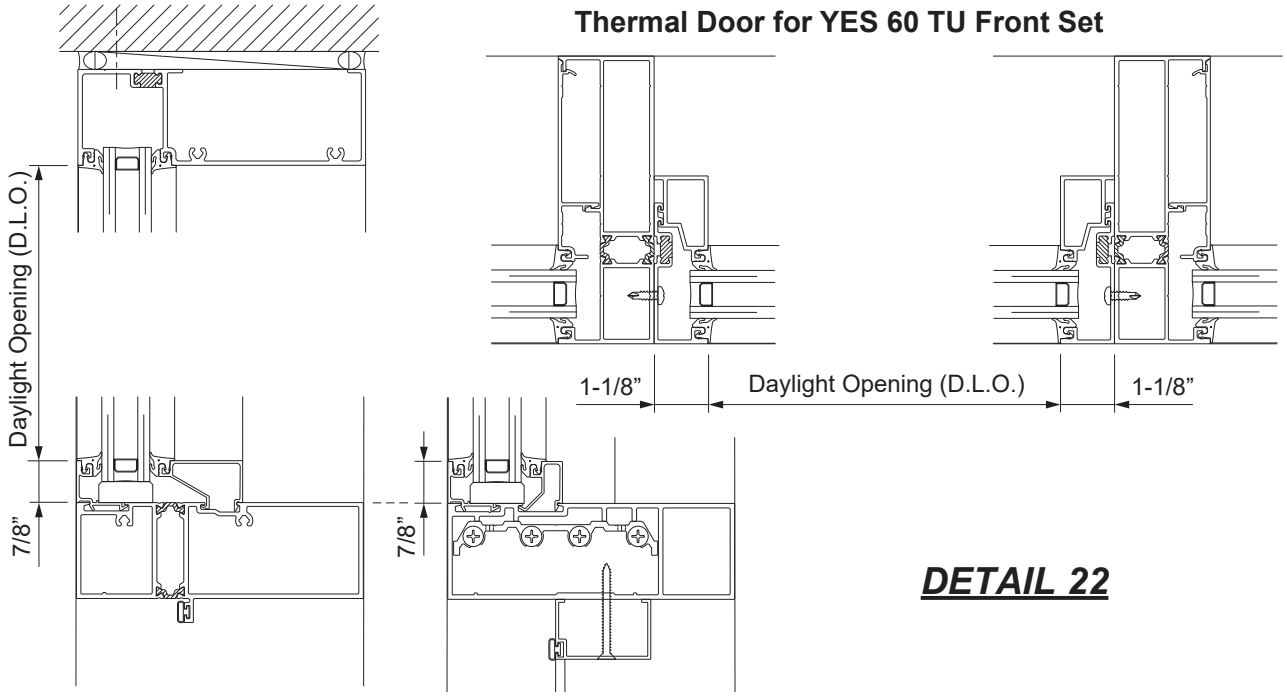

DETAIL 22

TYPE	YWW 45/50 T	YES 60 TU Front Set		
Width for Insulating Glass	D.L.O. +(plus) 7/8”	D.L.O. +(plus) 3/4”		
Height for Insulating Glass	D.L.O. +(plus) 7/8”	D.L.O. +(plus) 13/16”		

Calculate Door Glass Sizes:

Model 20D/35D/50D Door

Threshold (1/2”) Allowance Included

Door Opening Size	20D Narrow Stile	35D Medium Stile	50D Wide Stile
Height 4” Bottom Rail	D.O. -(minus) 7-1/2”	—	—
Height 8” Bottom Rail	D.O. -(minus) 11-1/2”	D.O. -(minus) 13-1/8”	D.O. -(minus) 14-3/16”
Height 10” Bottom Rail	D.O. -(minus) 13-9/16”	D.O. -(minus) 15-3/16”	D.O. -(minus) 16-1/4”
Width Single - Butt Hinge	D.O. -(minus) 4-7/8”	D.O. -(minus) 7-5/8”	D.O. -(minus) 10-5/8”
Width Single - Cont. Hinge	D.O. -(minus) 5-1/8”	D.O. -(minus) 7-7/8”	D.O. -(minus) 10-7/8”
Width Pair - Butt Hinge	D.O. / 2 -(minus) 4-7/8”	D.O. / 2 -(minus) 7-5/8”	D.O. / 2 -(minus) 10-5/8”
Width Pair - Cont. Hinge	D.O. / 2 -(minus) 5-1/8”	D.O. / 2 -(minus) 7-7/8”	D.O. / 2 -(minus) 10-7/8”

Model 40M/50M Monumental Door

Threshold (1/2”) Allowance Included

Door Opening Size	40M 4” Stile	50M 5” Stile
Height Standard Bottom Rail	D.O. -(minus) 12-11/16”	D.O. -(minus) 13-11/16”
Height 10” Bottom Rail	D.O. -(minus) 15-3/16”	D.O. -(minus) 16-3/16”
Width - Single	D.O. -(minus) 8-5/8”	D.O. -(minus) 10-5/8”
Width - Pair	D.O. / 2 -(minus) 8-5/8”	D.O. / 2 -(minus) 10-5/8”

MegaTherm® T – 25T Door

Threshold (1/2”) Allowance Included

Door Opening Size	25T Medium Stile
Height 8” Bottom Rail	D.O. -(minus) 11-9/16” *
Height 10” Bottom Rail	D.O. -(minus) 13-9/16” *
Width - Single	D.O. -(minus) 5-5/8”
Width - Pair	D.O. / 2 -(minus) 5-5/8”

MegaTherm® T – Model 35T/50T Door

Threshold (1/2”) Allowance Included

Door Opening Size	35T Medium Stile	50T Wide Stile
Height 8” Bottom Rail	D.O. -(minus) 13-1/8”	D.O. -(minus) 14-3/16”
Height 10” Bottom Rail	D.O. -(minus) 15-3/16”	D.O. -(minus) 16-1/4”
Width - Single	D.O. -(minus) 7-5/8”	D.O. -(minus) 10-5/8”
Width - Pair	D.O. / 2 -(minus) 7-5/8”	D.O. / 2 -(minus) 10-5/8”

NOTES: Heavy Duty 40M and 50M as well as MegaTherm T use rabbeted stiles allowing for clearance of continuous hinges. Glass sizes formulas remain the same as for butt hinges.

STEP 4 (OPTIONAL)
INSTALL OVERHEAD CONCEALED CLOSER IN OFFSET PIVOT & BUTT HINGE FRAMES

-Assemble the frame by first attaching the transom bar/closer shear block to the pivot jamb of the frame.
-Complete the assembly and installation of the frame following the standard installation instructions.
-Install the overhead concealed closer into the frame.
-Attach the cover plate and the offset arm.
-The top door rail has been routed out to clear the offset arm of the closer.
-Locate the arm cover package that is in the frame box and attach it to the bottom of the transom bar with #10-32 x 2” fasteners provided (three for singles and four for pairs).
See **Details 23 & 24**.

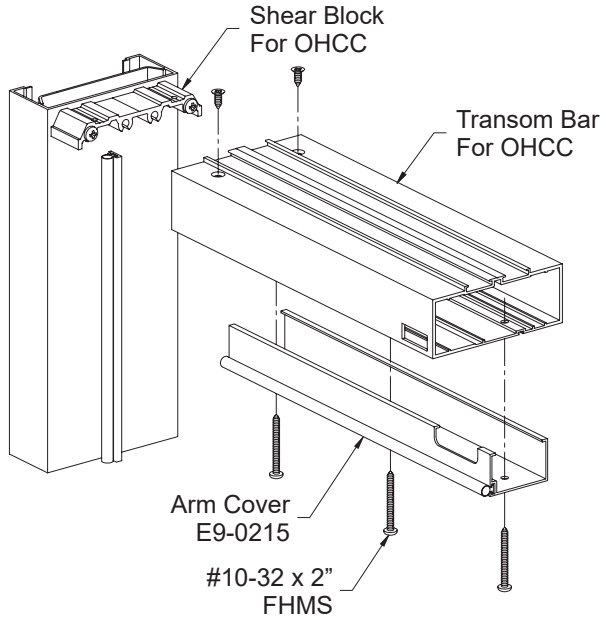

DETAIL 23

Standard transom bar shown,
Monumental and MegaTherm XT similar.

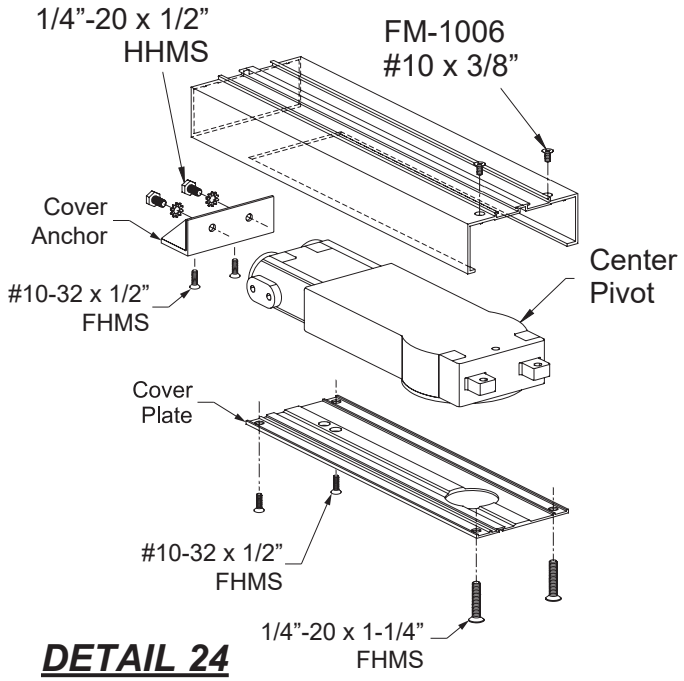

DETAIL 24

STEP 5 (OPTIONAL)
INSTALL BOTTOM OFFSET PIVOT, E1-0341

Offset pivot door frames that do not have a threshold will require bottom offset pivot, E1-0341, which may also be used as a replacement bottom pivot.

-Locate the bottom pivot package taped to the door.
-Anchor the pivot to the substrate using (3) FC-1228 fasteners and plastic plugs.
-Shim as required.
See **Detail 25**.

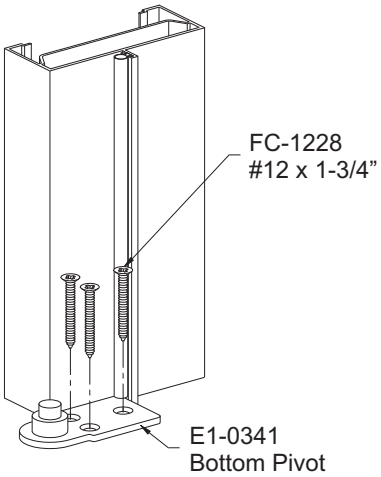

DETAIL 25

STEP 6
GLAZE THE DOOR

For Standard Doors:
Install interior glass stops.
- -Trim glazing gasket leaving 1/8” excess at each end.
- -Install the vertical glass stop first by engaging the heel ① first then snapping in the toe ②.

See **Detail 26**.
- -Center the horizontal glass stops and install.

-Prior to installing the glass, ensure the E3-0004 glass spacer and the E3-0005 adjustable cap are in their proper orientation for the type of glass as shown below in **Detail 28**:

parallel with the door stile/rail for 1/4” glass
perpendicular with the door stile/rail for 1” glass

For Thermal Doors:
- -Insert the E9-0809 glass stops with E2-0050 gaskets into the door stiles on one side. Set the glass in place, and insert the glass stops on the other side of the glass, compressing the gaskets.

See **Detail 27**.

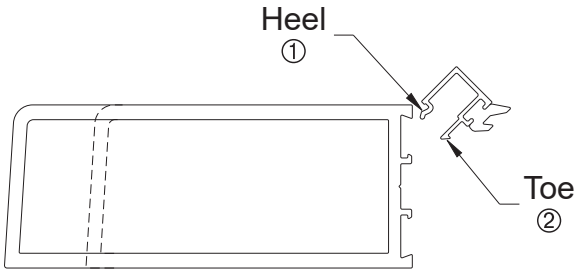

50D shown, other standard doors similar.

DETAIL 26

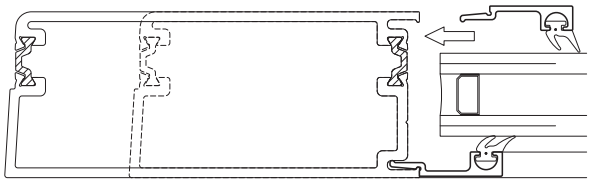

50T shown, other thermal doors similar.

DETAIL 27

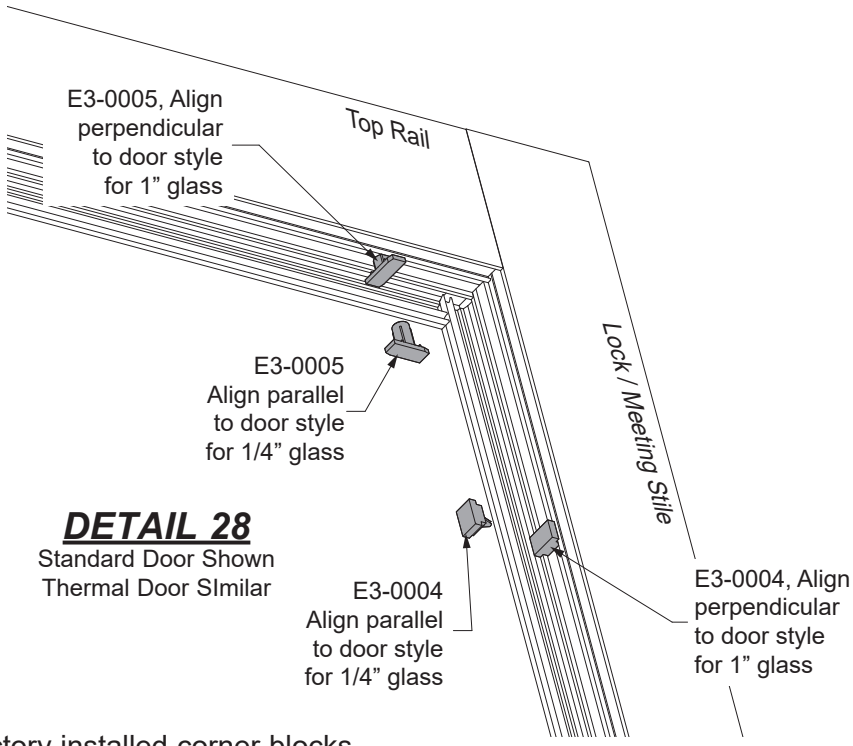

DETAIL 28
Standard Door Shown
Thermal Door SImilar

-Carefully install the door lite onto the factory installed corner blocks.
-Install the exterior glass stops repeating the instructions listed above.

STEP 7
INSTALL SMART SERIES PUSH/PULL HARDWARE

Attach pull handle:
- -Remove from the door carton the push/pull hardware and accessory package.
- -Fasten the pull handle to the lock stile with the 2-1/2” shoulder bolt at the top and with the 2-3/4” oval head machine screw at the bottom. Make sure the washer is properly seated under the screw head.

Attach push bar:
- -Attach the end cap to the pivot stile with the FM-2512 3/4” machine screw.
- -Insert the straight end of the push bar into the end cap and swing the curved end onto the shoulder bolt head. Tighten the set screws at each end of the push bar using a 1/8” Allen wrench.

See **Detail 29**.

Note: For center pivot doors, push bars are installed on both sides of the doors; attach shoulder bolts on both stiles and follow the instructions above to attach push bars. Repeat steps for the other side.

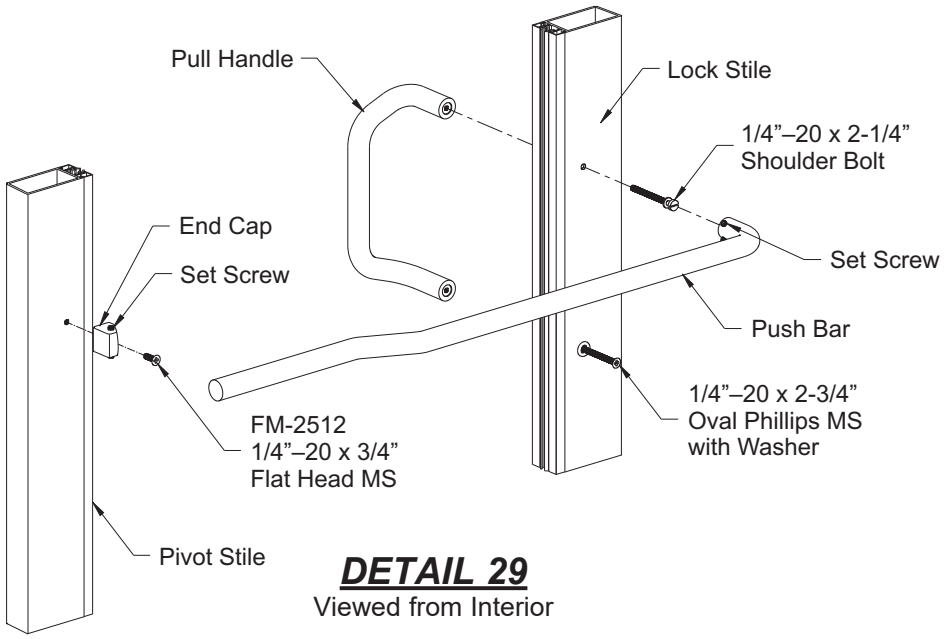

DETAIL 29
Viewed from Interior

STEP 8
INSTALL OFFSET PIVOT DOOR INTO FRAME

-Set the door down onto the bottom pivot of the frame.
-Compress the retractable pivot pin in the top pivot and set the door up into position so the pivot pin engages the frame pivot.
-Check the alignment of the door.
-Align the stile opposite the pivot stile by turning the screw located in the top rail:
Clockwise to raise the corner.
Counter-clockwise to lower the corner.
See **Detail 30**.

-Align the pivot stile by adjusting the screw in the bottom pivot.
-Unscrew the cap on top of the pivot and adjust the screw inside the pivot with a 3/16” Allen wrench:
Clockwise to raise the corner.
Counter-clockwise to lower the corner.
-Replace the cap on top of the pivot.
See **Detail 31**.

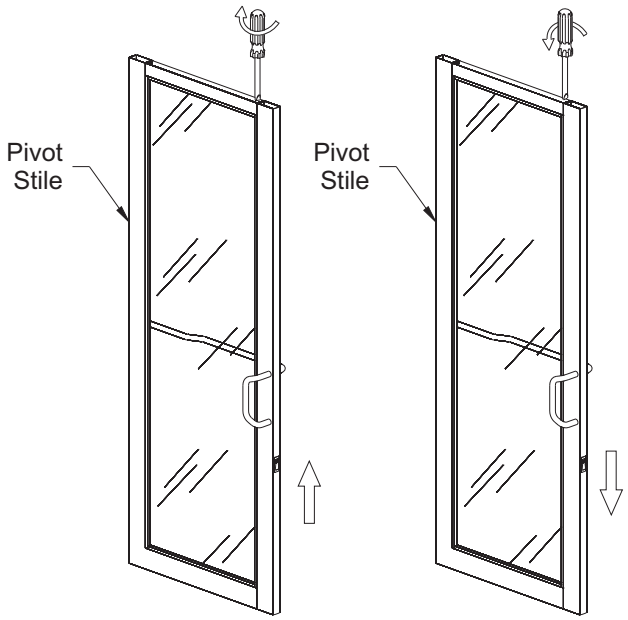

DETAIL 30

DETAIL 31

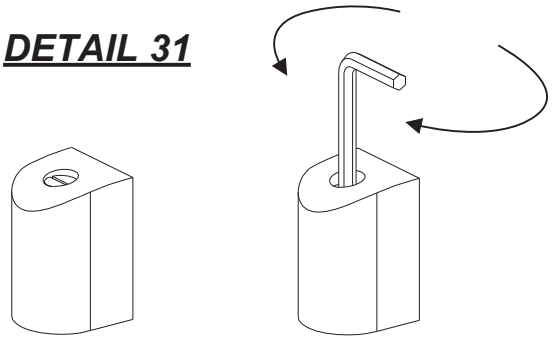

Clockwise = Raise
Counter Clockwise = Lower

STEP 8A
INSTALL BUTT HINGE DOOR INTO FRAME

-Remove from the door carton the package of eight fasteners that will attach the butt hinges to the backup plates in the frame.
-Carefully align the holes in the butt hinge with the holes in the back up plates and fasten the door to the frame. Completely support the door during this step.
-Check the alignment of the door with the frame.
-Adjust the alignment of the door by turning the screw located in the top rail:
Clockwise to raise the corner.
Counter-clockwise to lower the corner.
See **Detail 30**.

STEP 8B
INSTALL CENTER PIVOT DOOR INTO FRAME

-Remove from the package taped to the door the end cap and bolts for the top arm assembly.
-Remove from the pivot stile the two end caps.
-Check the alignment of the top arm:
The arm must be centered in the top rail.
See **Detail 32**.

-For non-hold open closers; slow the closer speed.
-Carefully rotate the pivot of the closer 90° to the exterior of the frame to install the door.
-Set the door down onto the bottom pivot and slide the top arm around the top pivot of the closer.
-Install the end of the top arm and the end caps of the door.
-Check the bottom corner of the door with the frame.
-Adjust the bottom corner of the door by turning the screw located in the top rail of the door:
Clockwise to raise the corner.
Counter-clockwise to lower the corner.
See **Detail 30** on the previous page.

-Adjust the closing and latch speed of the closer.

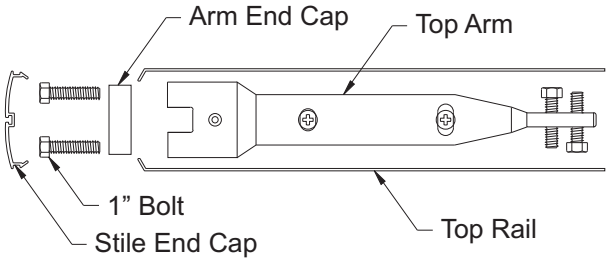

DETAIL 32

STEP 9
ADJUST WEATHER ASTRAGAL FOR PAIR OF DOORS

-Adjust the weather astragal by turning the adjustment screws located along the meeting stile cover of the active leaf:
Clockwise to increase the distance between leafs.
Counter clockwise to reduce the clearance between leafs.
See **Detail 33**.

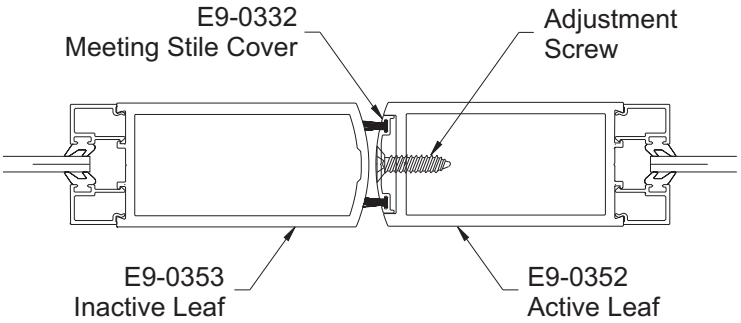

40M Shown, 20D, 35D, 50D, and 50M Similar.
Not used on Thermal Doors

DETAIL 33

STEP 10 (OPTIONAL)
INSTALL DOOR SWEEP

-Door sweeps help the weathering performance of the door and are designed to be attached to the interior face of the bottom rail.
-Transfer the location of each slot in the door sweep base, E9-0347, to the interior surface of the bottom rail:
  -Center the door sweep base on the bottom rail of the door.
  -Align the bottom edge of the door sweep base with the bottom edge of the bottom rail.
  -Mark the center of each slot on the bottom rail.
-Drill a 0.141” diameter hole (#28 drill bit) at each location marked.
-Attach the door sweep base to the bottom rail with four PC-0808 fasteners; do not completely tighten the fasteners. Check the contact of the door sweep gasket, E2-0067, with the threshold. The door sweep gasket must make full contact with the threshold to obtain the full benefit of the door sweep.
-Tighten all of the door sweep fasteners.
-Use a wood block and mallet to snap the door sweep cover, E9-0348, onto the base.

See **Detail 34**.

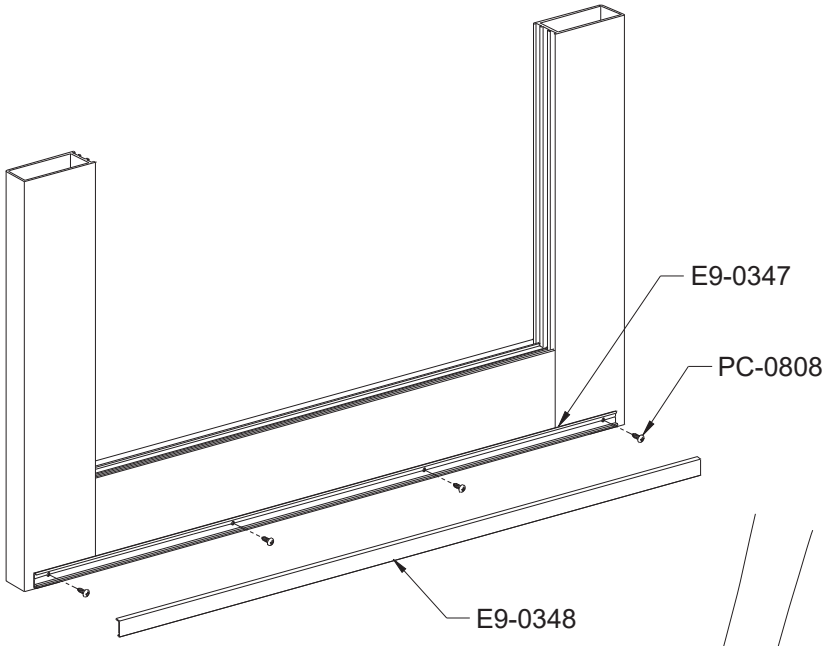

DETAIL 34
Viewed from Interior

Interior Sweeps Required for Thermal Doors

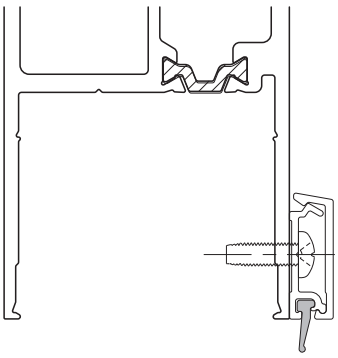

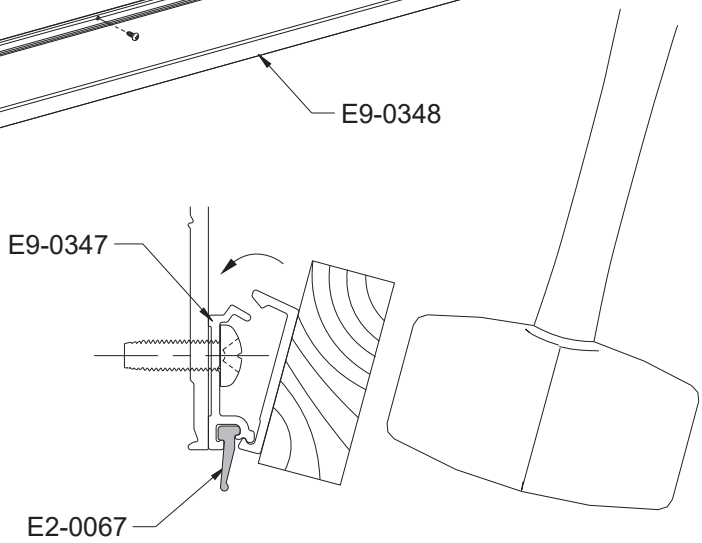

YKK AP America Inc.

101 Marietta Street NW
Suite 2100
Atlanta, Georgia 30303
www.ykkap.com