YKK AP America Inc.

YWW 45 TU - Window Wall
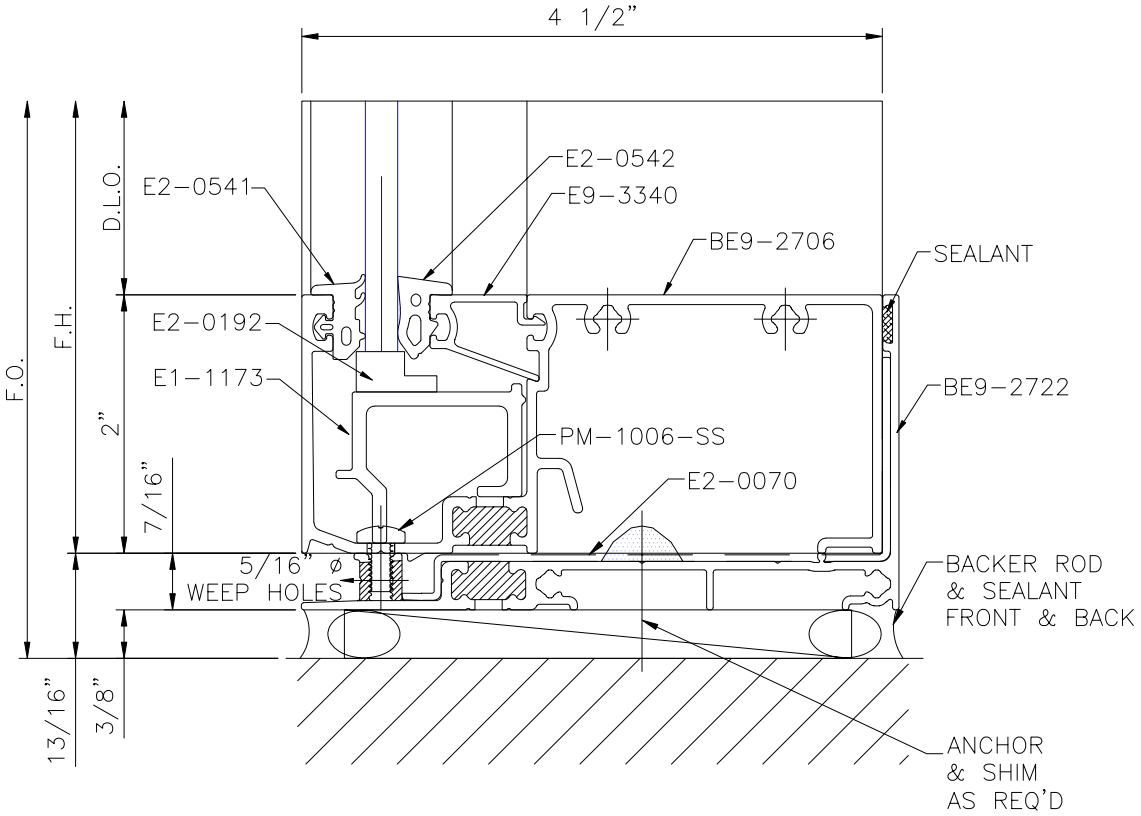
CONTINUOUS SILL DETAIL @ JAMB W/ 1/4" GL. ADAPTOR