YKK AP America Inc.

YUW 750 TU - Unitized Curtainwall System
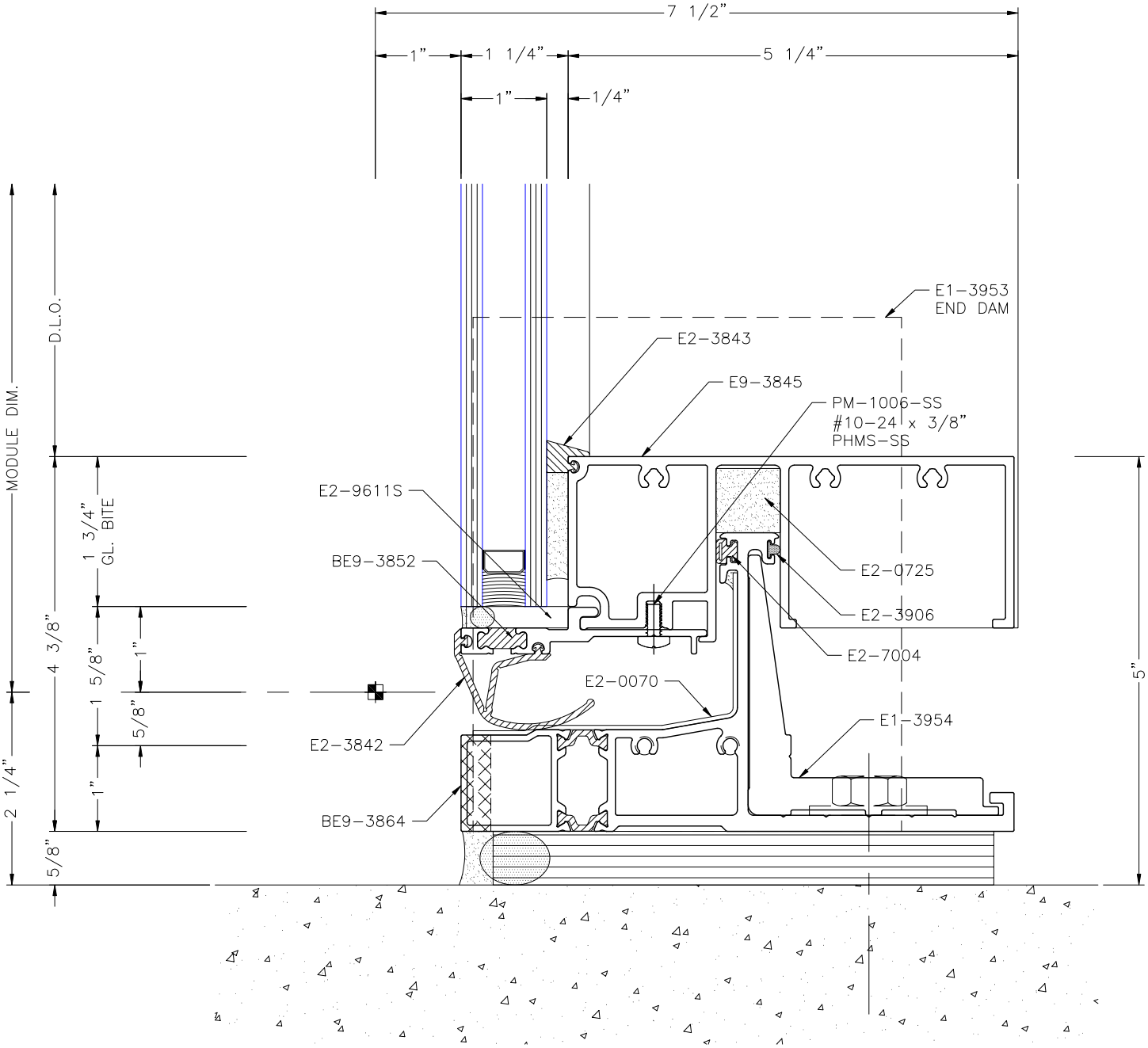
SILL DETAIL