YKK AP America Inc.

YOW 350 T - Heavy Duty Window System
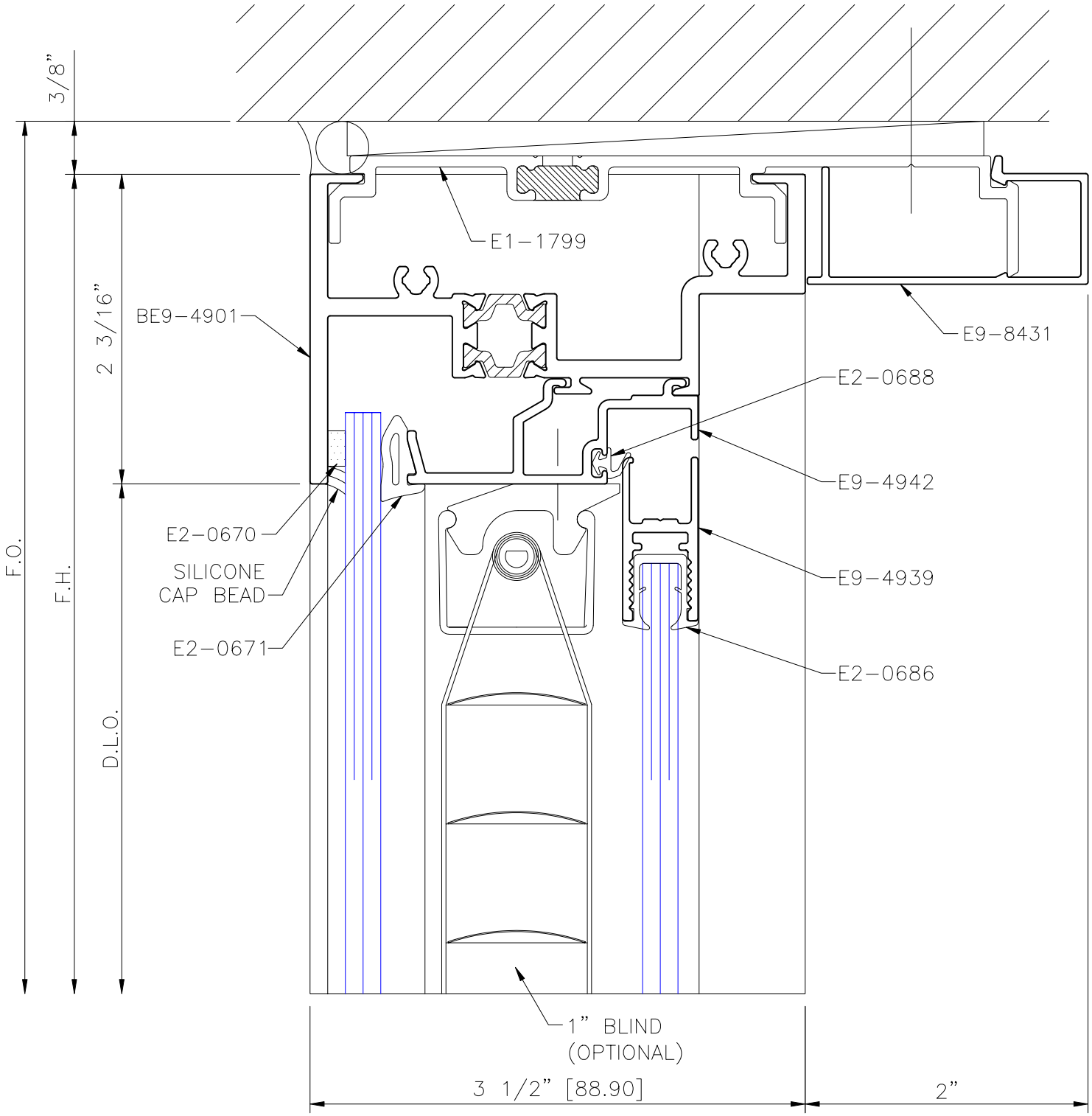
HEAD - FIXED