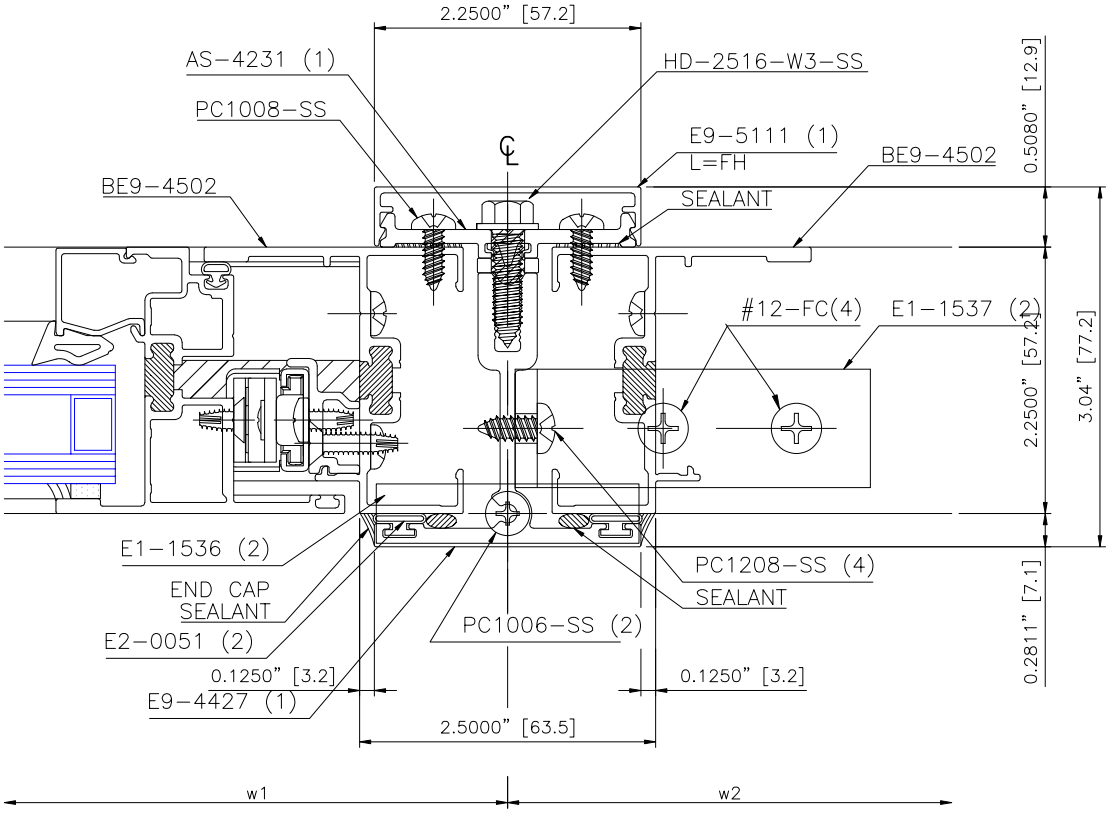

HVHZ: 15710.2

WZ3: 15729.1