YKK AP America Inc.

YOW 225 TU - Window System
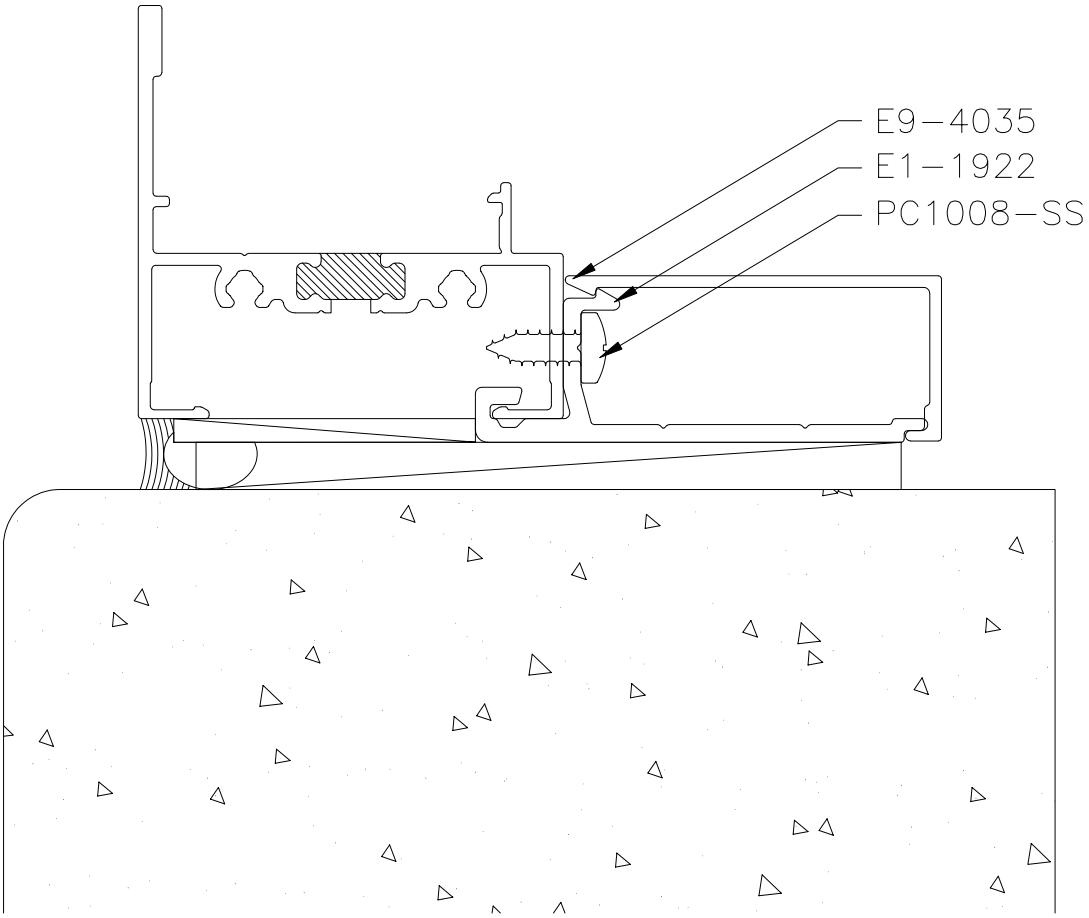
ANCHOR CLIP & COVER