YKK AP America Inc.

YHW 60 TU - Pre Glazed Hurricane Impact Window Wall
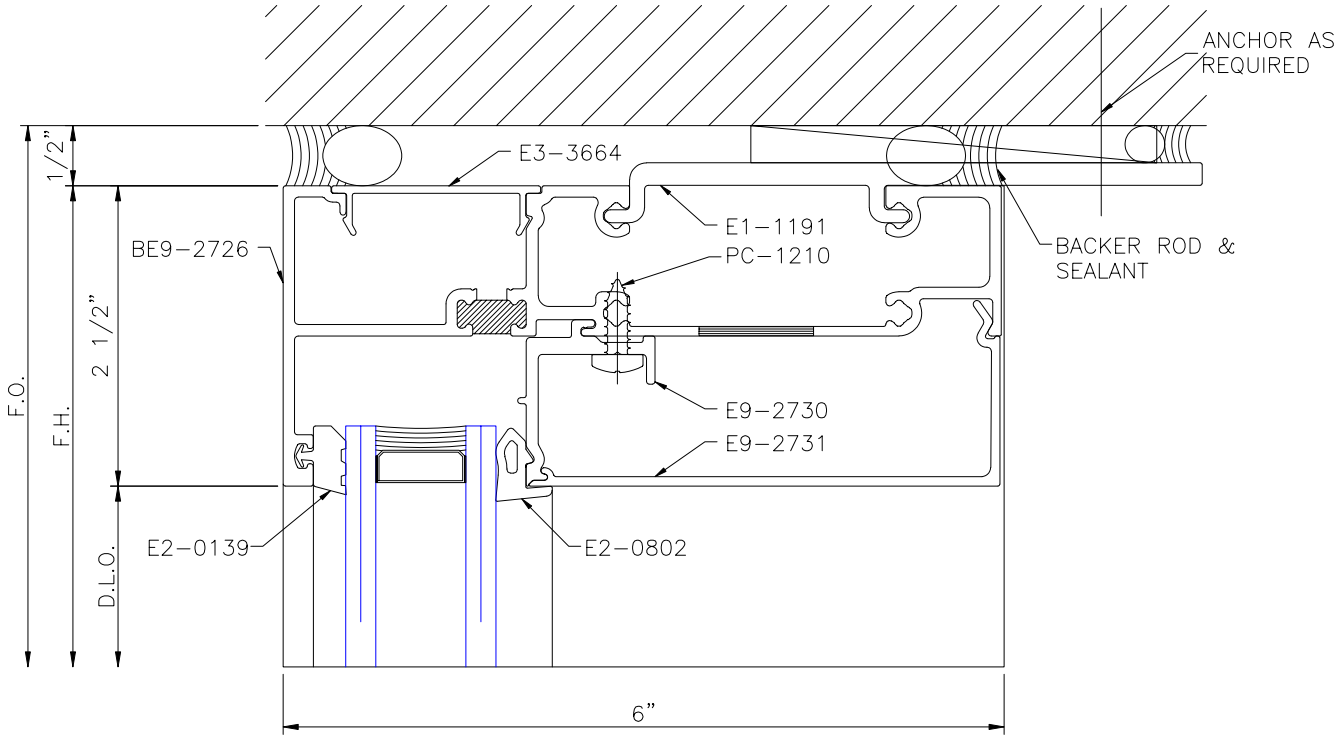
OPTIONAL HEAD DETAIL