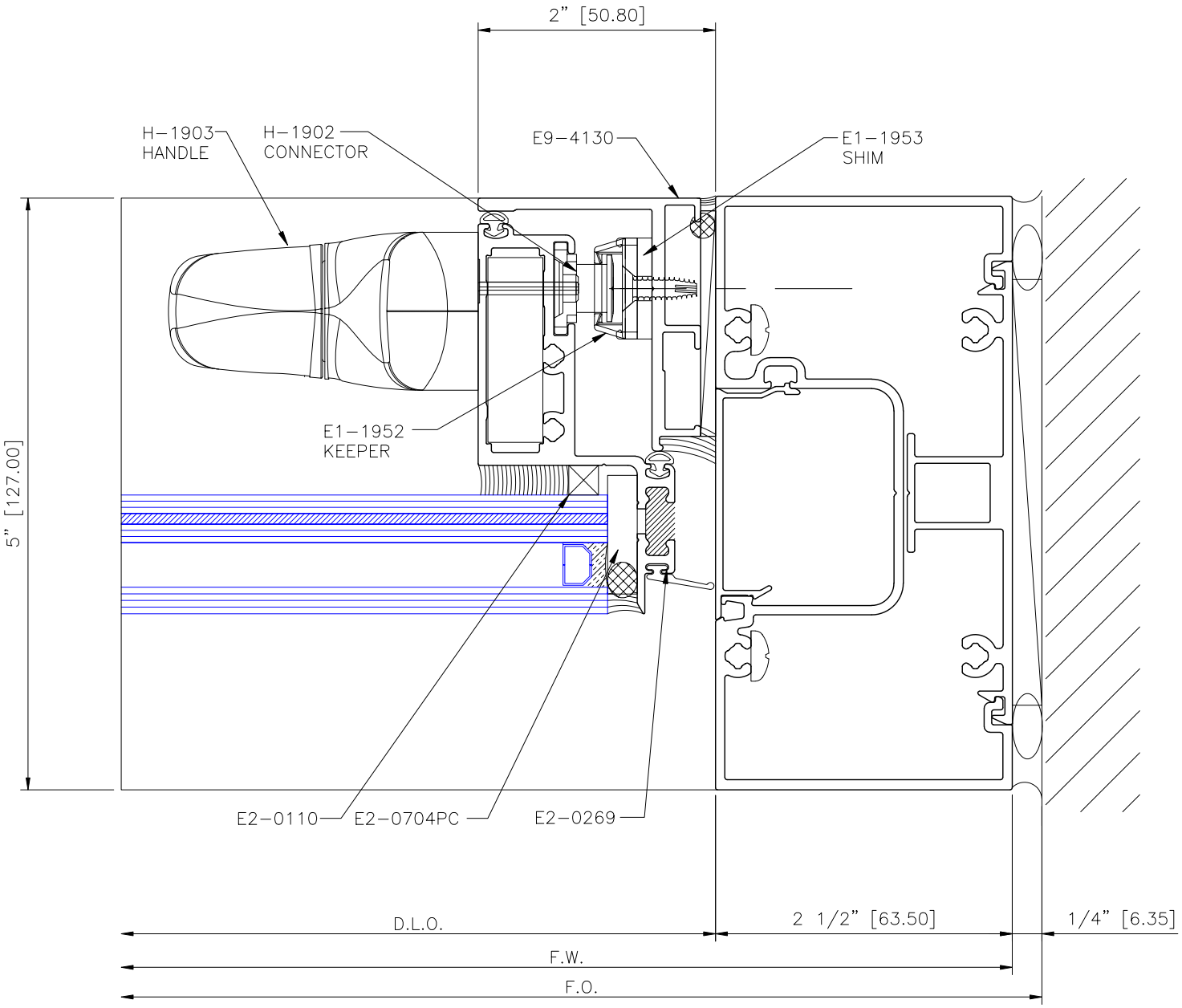NOTE: +/- 80 PSF DESIGN PRESSURE