YKK AP America Inc.

YCW 750 XTP - Thermally Broken Curtainwall System With Polyamide Pressure Plates
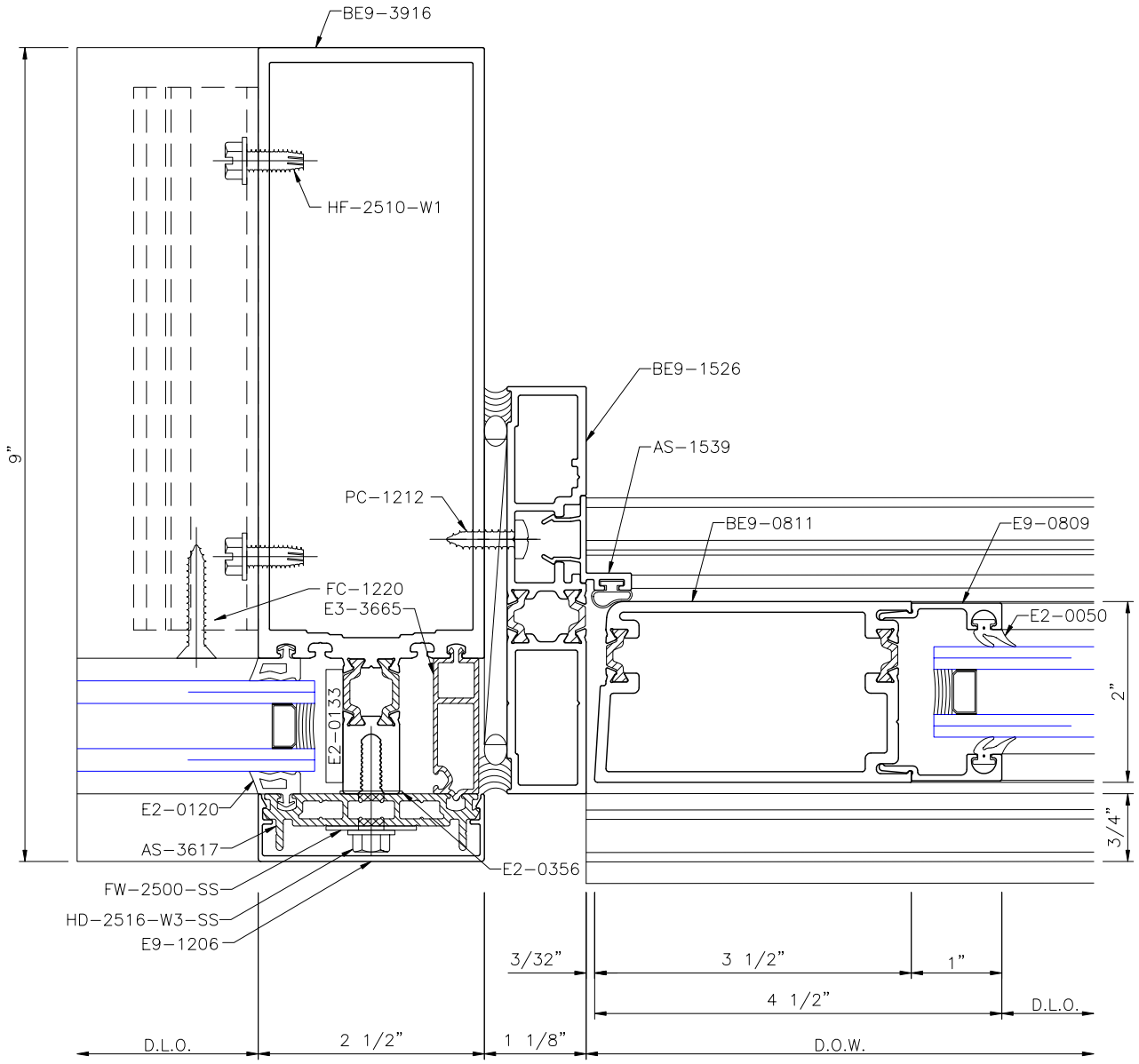
STANDARD LEFT JAMB DETAIL @ SIDELITE - MODEL 35T