YKK AP America Inc.

YCW 750 XT IG - Thermally Broken Inside Glazed Curtain Wall System
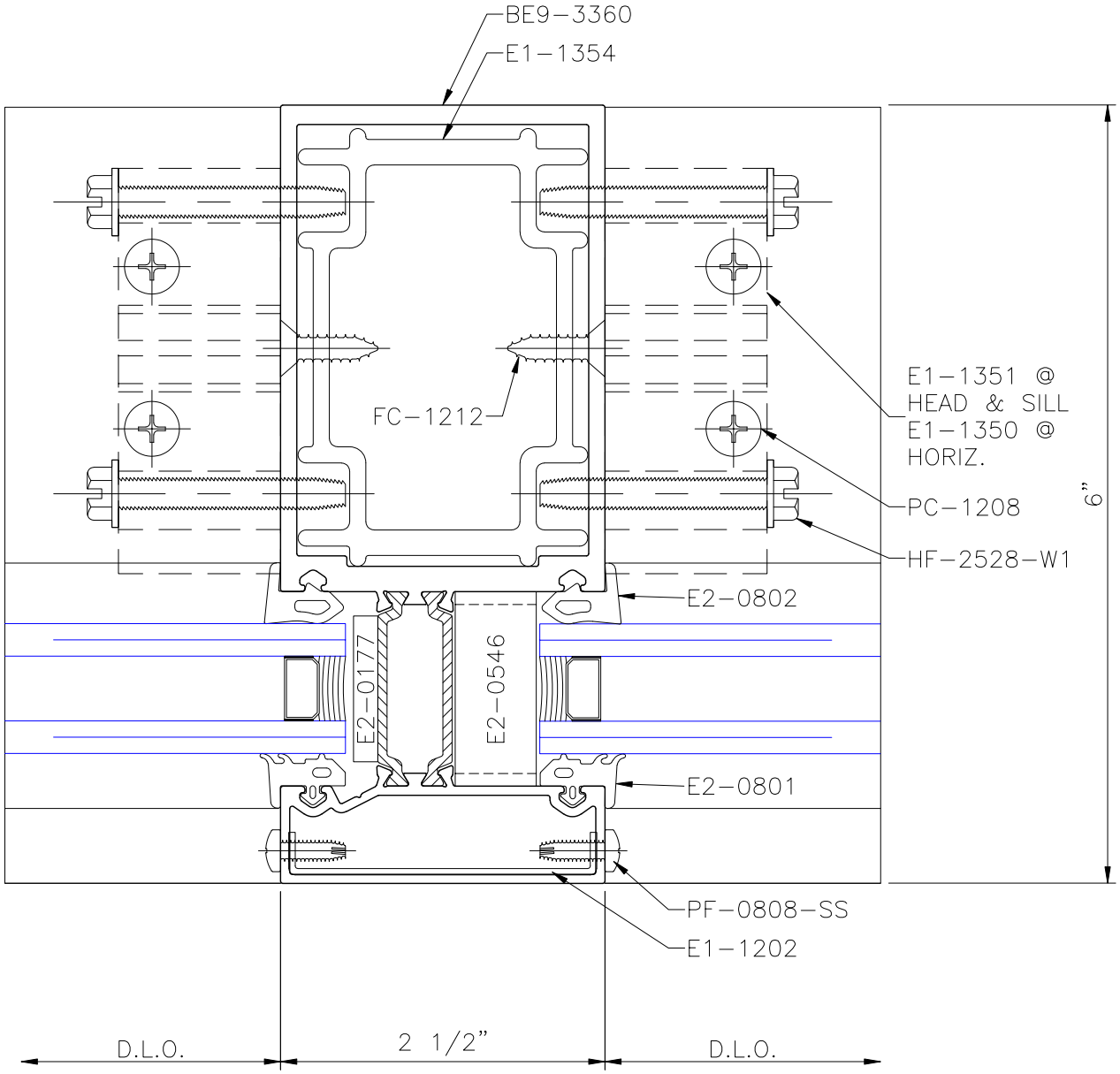
VERTICAL SPLICE SLEEVE DETAIL (INTEGRAL COVER)