YKK AP America Inc.

YCW 750 SSG - Curtain Wall System
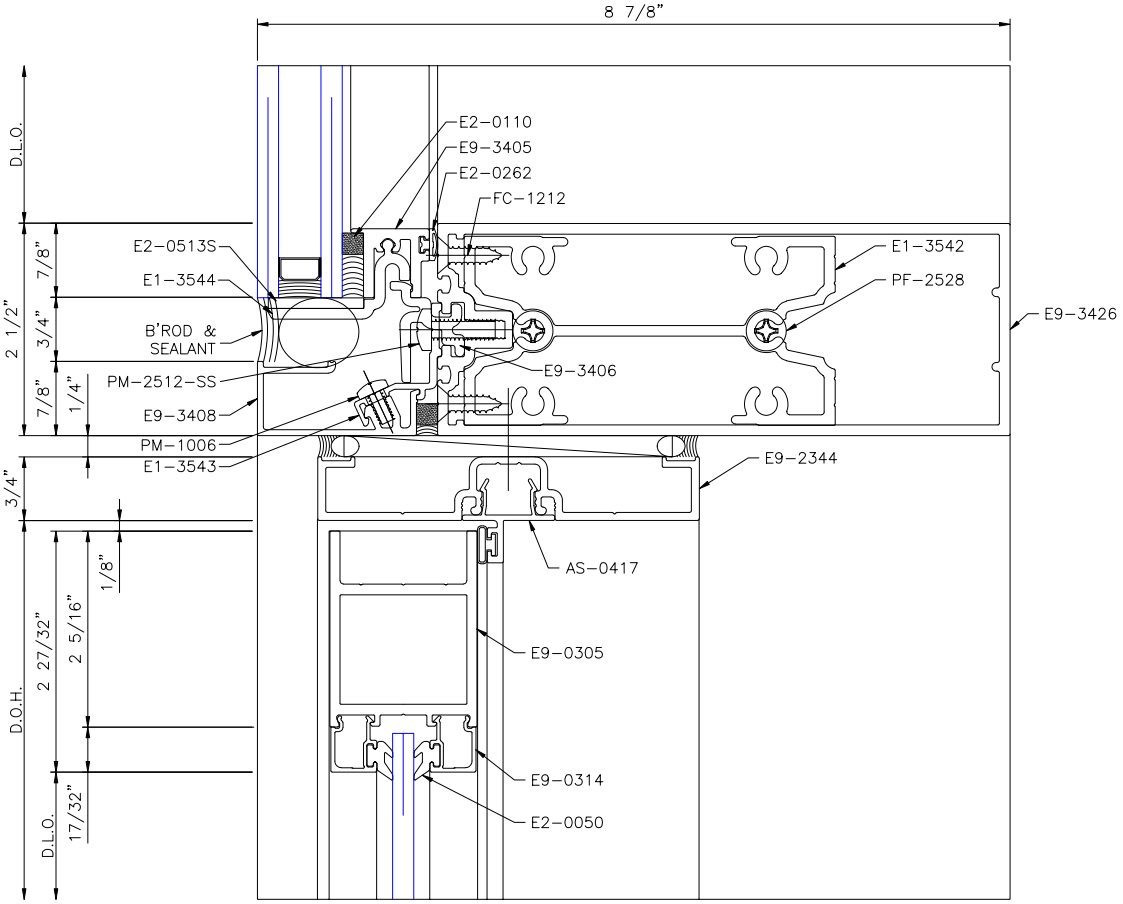
DOOR HEAD DETAIL