YKK AP America Inc.

YCW 750 SplineTech® - Screw Spline Outside Glazed Curtain Wall System
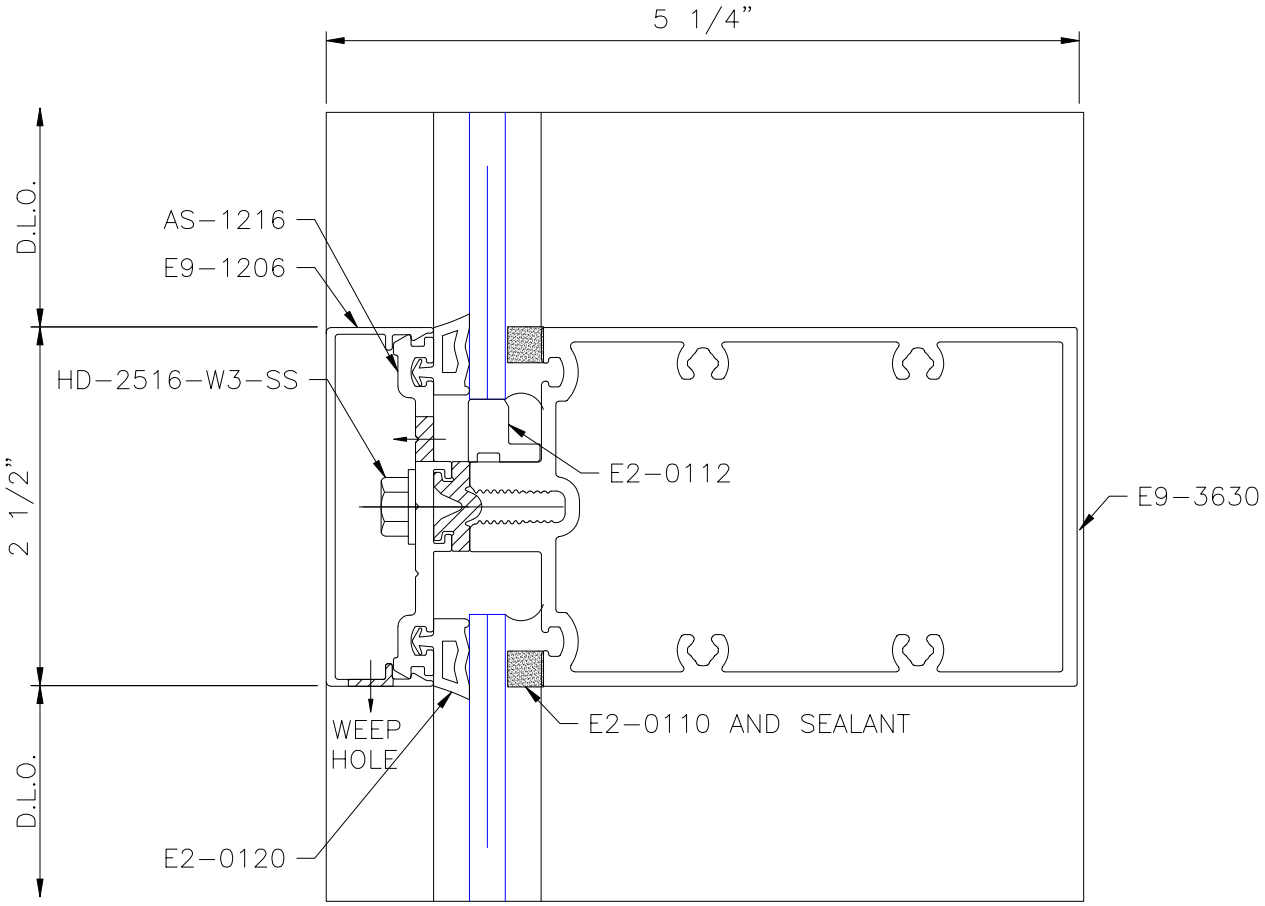
Horizontal Detail