YKK AP America Inc.

YCW 750 IG - Inside Glazed Curtain Wall System
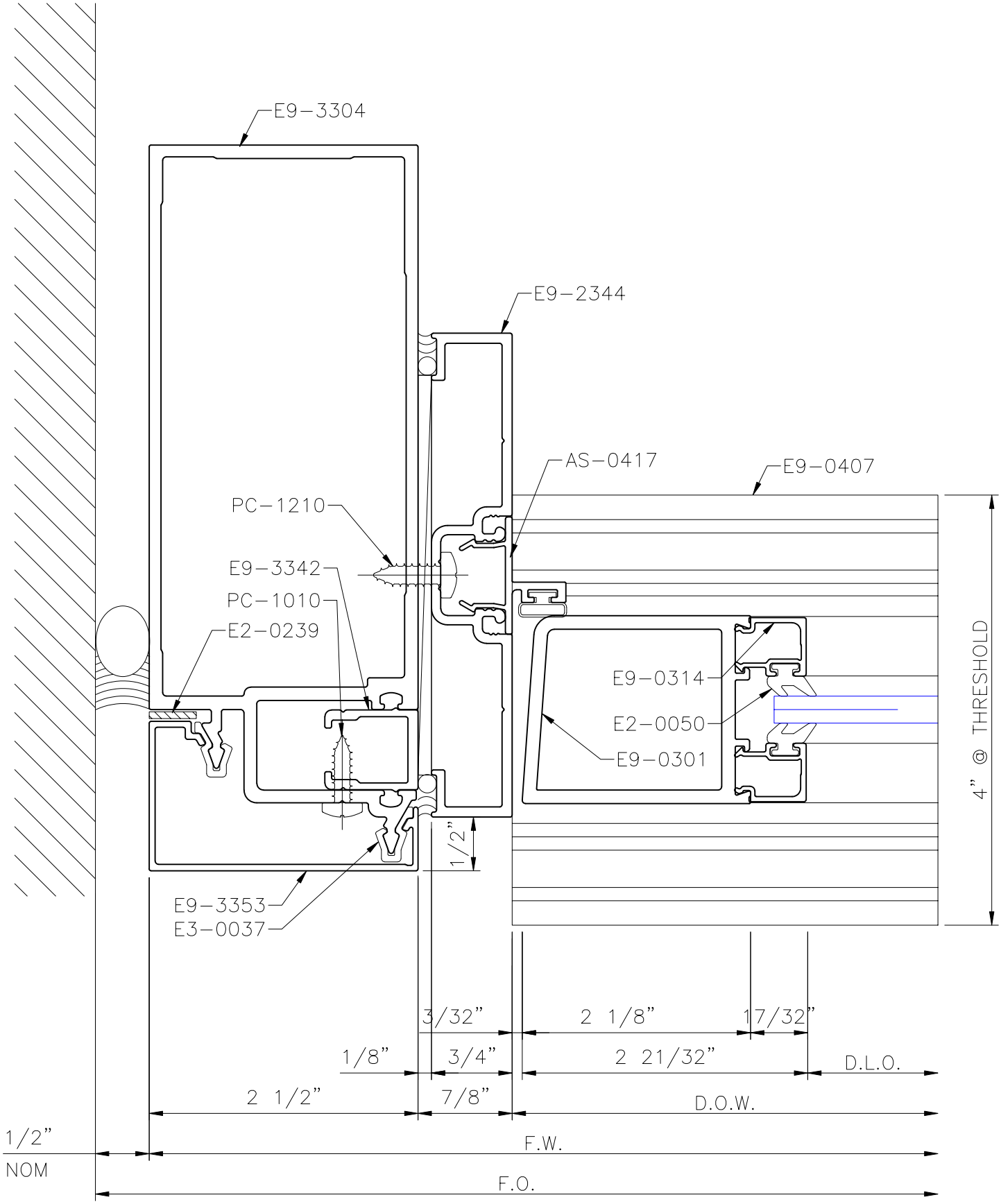
LEFT DOOR JAMB DETAIL