YKK AP America Inc.

35H Medium Stile Impact Resistant Door - Hurricane Storefront System
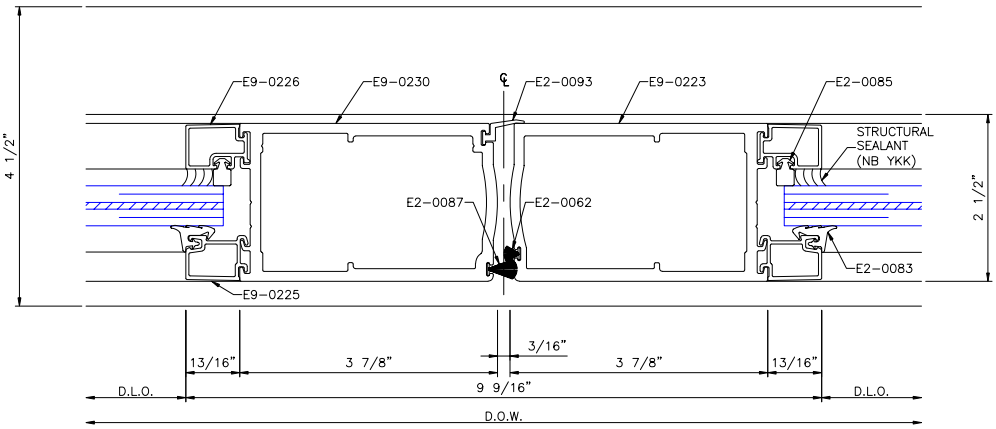
MEETING STILES DETAIL