TABLE OF CONTENTS

ENTRANCE HARDWARE LOCATION ..... Page 2 to 4

PULL/PUSH BAR ..... Page 5

PIVOTS & HINGES ..... Pages 6 to 11

LOCKING DEVICES ..... Pages 12 to 14

PANIC DEVICES ..... Pages 15 to 17

REMOVABLE MULLIONS ..... Page 18 to 20

CLOSERS ..... Pages 20 to 21

THRESHOLD & WEATHER STRIPPING ..... Page 22

DOOR OPENING CLEARANCE

Single Acting Door

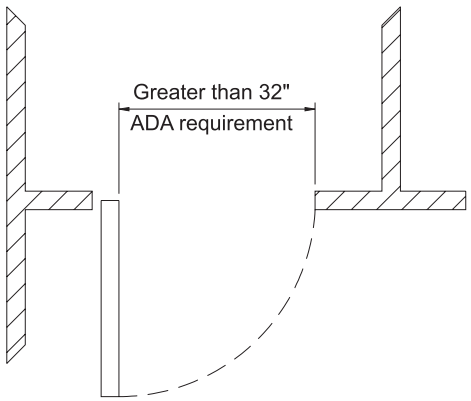

Double Acting Door

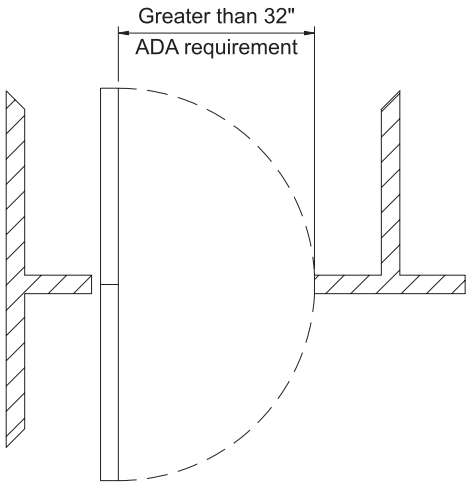

STANDARD ENTRANCE HARDWARE LOCATION

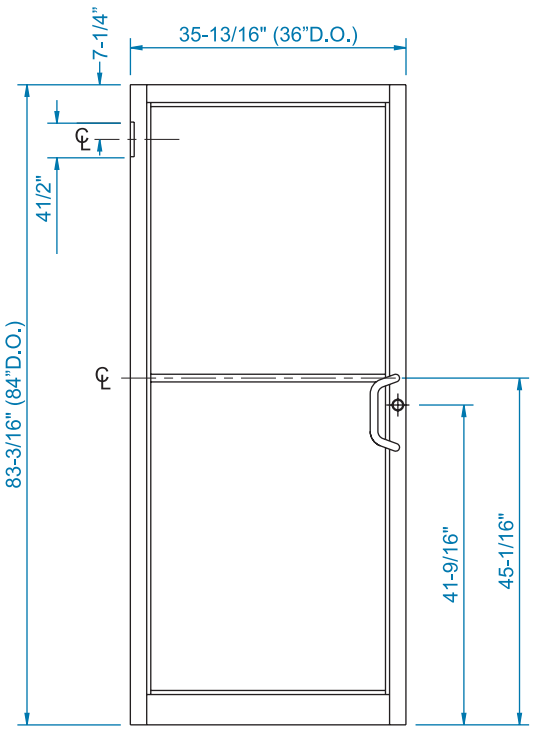

Standard Hardware
MS Hookbolt Lock with Thumbturn
Smart Series Push/Pull
Pair of Standard Butt Hinges
1-1/2 pair for doors over 90”

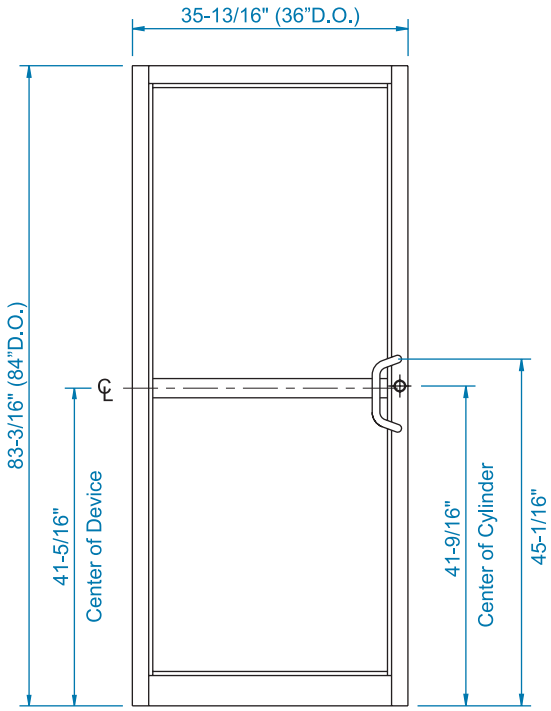

Standard Exit Devices
YKK AP Standard Rim Panic
With YKK AP Smart Series Pull

NOTE: All dimensions shown are for actual door leaf.
Standard floor clearance = 11/16".
Clearance plus hardware location dimensions = height above finished floor. May vary by door bottom clearance requirements.

STANDARD ENTRANCE HARDWARE LOCATION

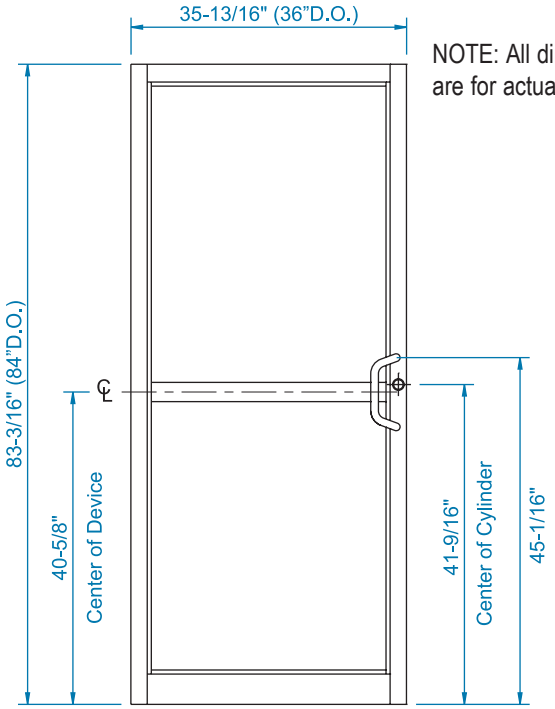

NOTE: All dimensions shown are for actual door leaf.

Standard Exit Devices
YKK AP Standard CVR Panic
With YKK AP Smart Series Pull

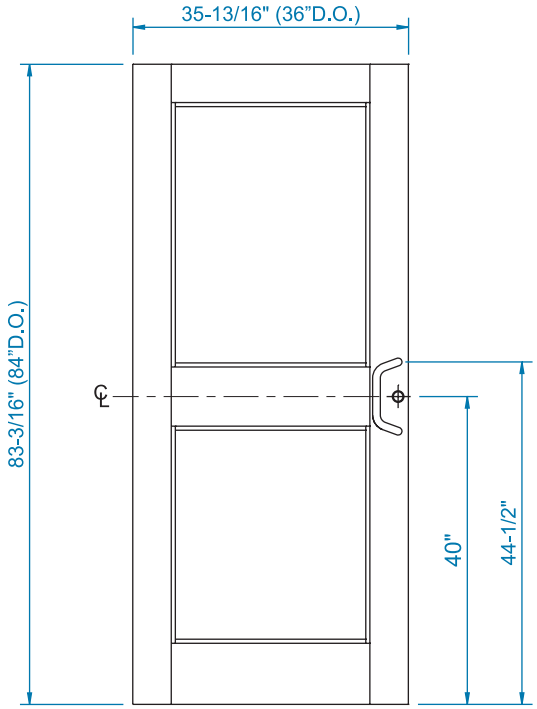

Mid-rail Exit
YKK AP Standard Midpanel Panic
With Smart Series Pull

OPTIONAL ENTRANCE HARDWARE LOCATION

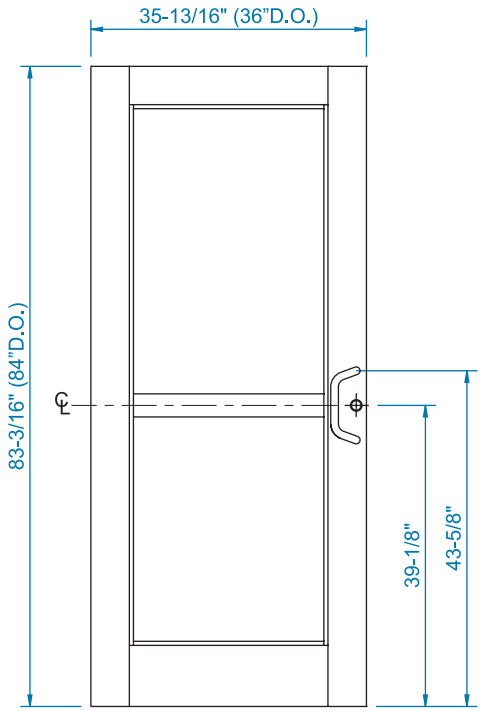

Optional Exit Devices-Single Door
Von Duprin® 33 Series Rim
Von Duprin® 99 Series Rim (50D&50M only)
With Smart Series Pull

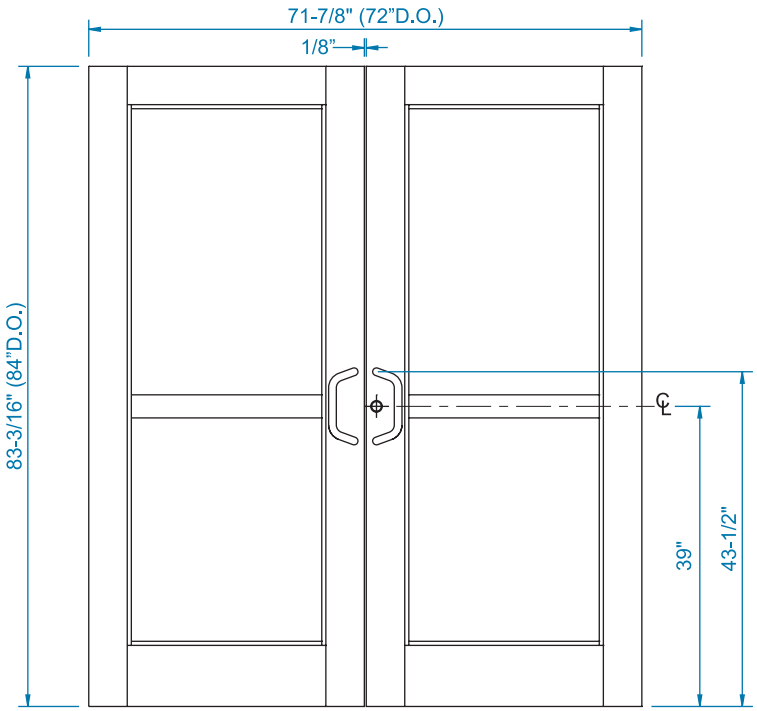

Optional Exit Devices-Pair Doors
Von Duprin® 33 Series Rim
Von Duprin® 99 Series Rim (50D&50M only)
With Smart Series Pull

OPTIONAL ENTRANCE HARDWARE LOCATION

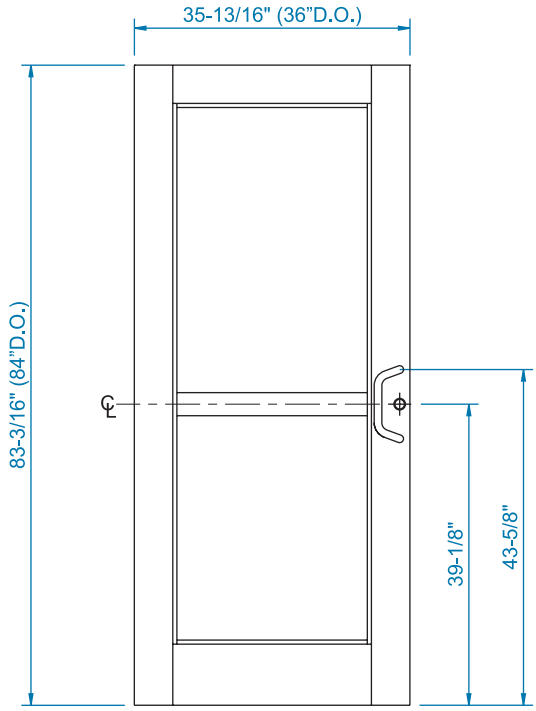

Optional Exit Devices
Von Duprin® 3347 Series CVR
With Smart Series Pull

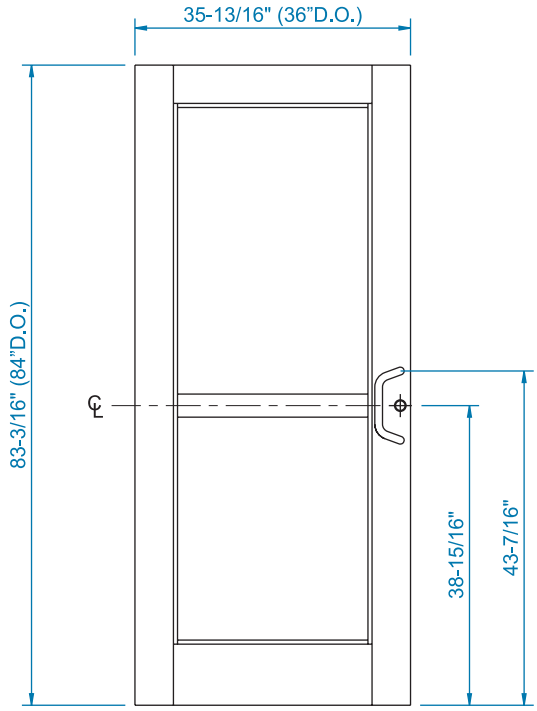

Optional Exit Devices
Von Duprin® 9947 Series CVR
(50D & 50M only)
With Smart Series Pull

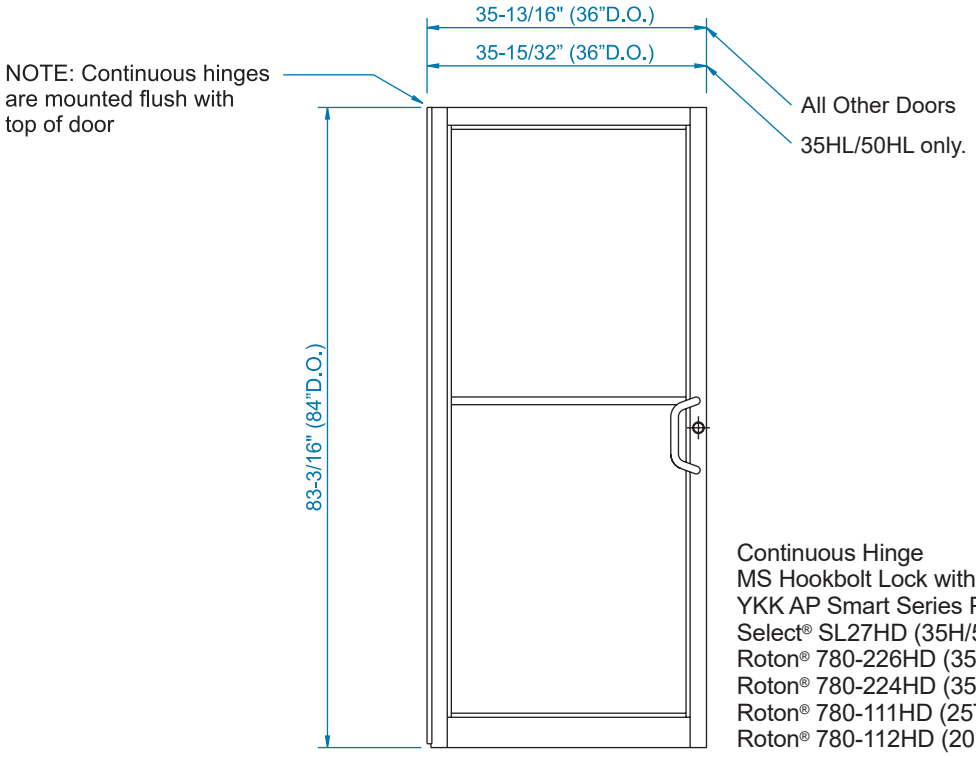

Continuous Hinge
MS Hookbolt Lock with Thumbturn
YKK AP Smart Series Push/Pull
Select® SL27HD (35H/50H Door)
Roton® 780-226HD (35H, 40M/50M Doors)
Roton® 780-224HD (35HL/50HL and 25FD Doors)
Roton® 780-111HD (25T/35T/50T Doors)
Roton® 780-112HD (20D/35D/50D Doors)

NOTE: All dimensions shown are for actual door leaf.
Standard floor clearance = 11/16".
Clearance plus hardware location dimensions = height above finished floor. May vary by door bottom clearance requirements.

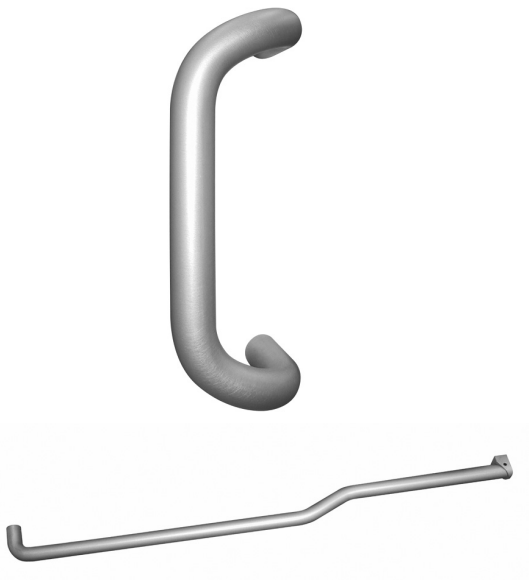

H-1141

STANDARD – SMART SERIES PULL/PUSH BAR

PULL HANDLE

Description:

1. Innovatively styled extruded aluminum 1" diameter canted offset pull with 9" O.C. mounting. The open style assists handicapped access and permits easy access to the lock cylinder.

Finish:

628 Clear, 335 Black, 612* (US 10), 613* (US 10B), 629* (US 32), & 630* (US 32D)

PUSH BAR

Description:

1. The YKK AP SmartPush is a truly innovative 1" diameter push bar designed to help ensure the safety of building occupants. The unique design subtly directs the user to push on the correct side of the door so as not to impede egress from the building.**

Finish:

628 Clear, 335 Black, 612* (US 10), 613* (US 10B), 629* (US 32), & 630* (US 32D)

For use with: All YKK AP entrances.

**** Non-Stock Item***

***** Minimum door width for this item is 27".***

H-1104

OPTIONAL – 1" DIAMETER PULL/PUSH BAR

PULL HANDLE

Description:

1. Contemporary styled extruded aluminum 1" diameter 90 degree offset pull with 9" O.C. mounting; pull projection 3-1/2" from door face. Mounting is concealed type or thru-bolt.

Finish:

628 Clear, 335 Black, 612* (US 10), 613* (US 10B), 629* (US 32), & 630* (US 32D)

PUSH BAR

Description:

1. Contemporary styled extruded aluminum 1" diameter push bar bent at each end; bar projection approximately 2-1/2" from door face. Mounting is concealed type.

Finish:

628 Clear, 335 Black, 612* (US 10), 613* (US 10B), 629* (US 32), & 630* (US 32D)

For use with: All YKK AP entrances.

**** Non-Stock Item***

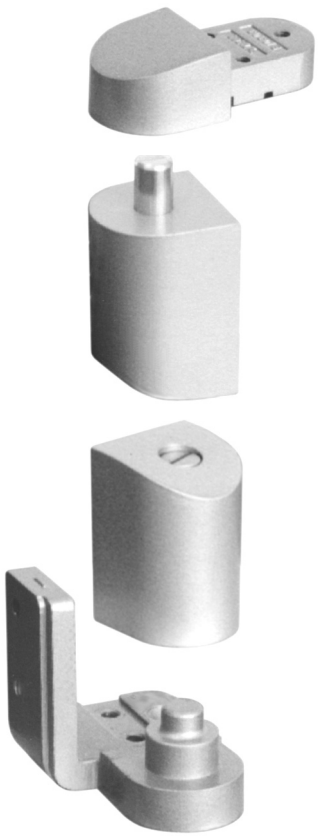

H-2101 (RH)
H-2102 (LH) Offset Pivot

STANDARD – OFFSET PIVOT PACKAGE – Includes:

TOP PIVOT

Description:

1. Door and frame portion of top pivot assembly are die cast aluminum.
2. Press fit bearing on frame portion is self-lubricating oilite bronze type.
3. Spring loaded hardened steel dowel pivot pin in door portion completes assembly.

BOTTOM PIVOT

Description:

1. Door portion; Cast aluminum with radial and thrust ball-bearings; with vertical screw adjustment.
2. Frame portion (with threshold): Cast aluminum pivot base with steel pivot; integral part of door frame and securely anchors frame and threshold to floor.
3. Frame portion (without threshold): Stainless steel pivot plate with stainless pivot; plate fastened at three points directly to floor.

Finish:

Electrodeposition coating in aluminum or black to match Anodized Plus®.

Application:

1. Top offset pivot: Mortised frame portion into header/transom bar, attached with screws through extrusion and threaded into pivot block. Spring loaded pivot allows for easy installation and maintenance.
2. Bottom offset pivot: Frame portion is used with threshold. On interior or vestibule doors not requiring threshold, floor mounted portion is used. Door portion provides vertical adjustment with both pivot pieces.
3. Typical package for doors up to 7'-6" height; requires intermediate pivot for doors over 7'-6" high.
4. Intermediate pivot can be specified for doors to 7'-0" height.

For use with: Models 20D/35D/50D, 25T/35T/50T, and 35HL/50HL.

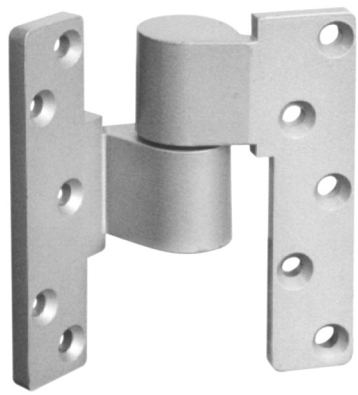

H-2201 (RH)
H-2202 (LH) Intermediate Pivot

OPTIONAL STANDARD – INTERMEDIATE OFFSET PIVOT

Description:

1. Aluminum pivot is fully mortised into door and frame with 3/4" offset from door face.
2. Full race ball bearing and oilite bushing; bearing is corrosion resistant and self lubricating. Pin fully retractable for ease of installation and vertical adjustment.

Finish:

Baked epoxy finish in aluminum or black.

Application:

1. Use in conjunction with offset pivot package for additional strength and door/frame alignment.
2. Use on doors experiencing high traffic volume or on doors exceeding 7'-6" high.
3. Use with offset pivot package only; doors over 7'-6" require intermediate pivot.
4. Intermediate pivot can be specified for doors to 7'-0" height.
5. Intermediate pivot is additional cost item.

For use with: Models 20D/35D/50D, 25T/35T/50T, and 35HL/50HL.

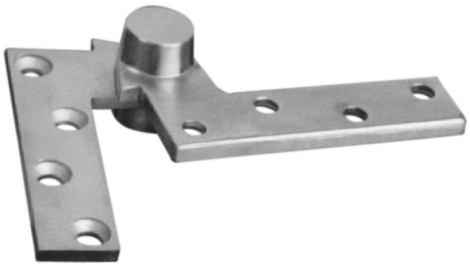

P-21111 (RH)
P-22112 (LH)
Heavy Duty Offset Pivot Package

HEAVY DUTY – OFFSET PIVOT PACKAGE – Includes

TOP PIVOT

Description:

1. Door and frame portion made of forged bronze.
2. Frame portion constructed with a bronze oilite bearing.
3. Pivot pin is hardened steel and treated to prevent rusting. Parco-lubricated.
4. Grade 1.

145” - Model 35H

BOTTOM PIVOT

Description:

1. Door portion is heavy duty steel with arm cap.
2. Frame portion is brass. Floor mounted for maximum strength.
3. Grade 1.

Finish:

Exposed surfaces can be US26D, US26, US10, and/or US10B.

Application:

1. Top pivot: Mortised into header/transom bar. Door portion is applied to interior door web for added strength.
2. Bottom pivot: Door portion is mounted directly into door web.
3. The use of these pivots is primarily for high frequency and/or where extra strength is required. YKK AP recommends the use of at least one (1) intermediate offset pivot when specifying the Heavy Duty Pivot Packages.

For use with: Models 20D/35D/50D, 40M/50M, 25T/35T/50T, and 35H/50H.

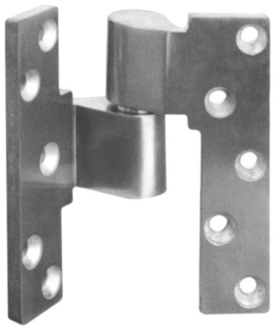

P22101 (RH)
P22102 (LH)
Heavy Duty Intermediate Pivot

HEAVY DUTY – INTERMEDIATE OFFSET PIVOT

Description:

1. Made of forged bronze. Corrosion resistant, self-lubricating thrust bearing with a hardened Parco-Lubricated steel pivot pin.
2. Grade 1.

Finish:

628 Clear, 335 Black, US26D, US26, US10, and/or US10B.

Application:

1. Use in conjunction with Heavy Duty Pivot package to provide maximum strength and door/frame alignment.
2. Should be used on all applications requiring the use of 40M/50M Monumental type doors
   and/or use of Heavy Duty pivots.
3. Pivot is fully mortised into both door and frame.
4. Back-up or reinforcing plates are used in both door hinge stile and frame hinge jamb.

For use with: Models 20D/35D/50D, 40M/50M, 25T/35T/50T, and 35H/50H.

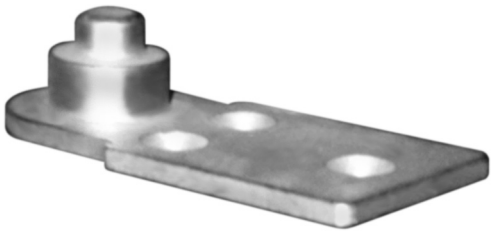

H-2111
Offset Pivot for No Threshold Applications

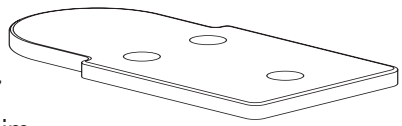

E1-0387
Pivot Shim

OFFSET PIVOT – FRAME PORTION FOR NO THRESHOLD APPLICATIONS

Description:

1. Cast stainless steel pivot base securely anchors pivot at three points directly to the floor.
2. Designed to work with the standard offset pivot door portion.

Finish:

Mill finish.

For use with: Models 20D/35D/50D, 25T/35T/50T, 35H, and 25FD.

PIVOT SHIM

Description:

1. Solid machined aluminum shim for use with H-2111.

Finish:

Mill finish.

For use with: Optional for all YKK AP entrances.

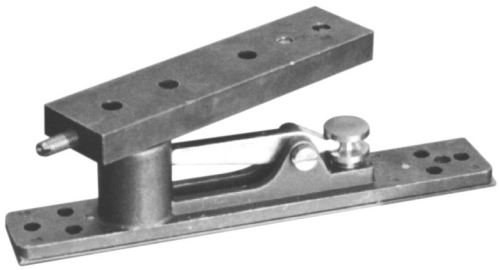

H-2401 Top Center Pivot

STANDARD – CENTER PIVOT

Description:

1. Cast aluminum “Walking Beam Type” frame pivot portion with hardened steel pivot pin for additional extension through transom bar/header.
2. Door pivot portions are machined aluminum with oilite bronze self-lubricating bearings; top center hung pivot parts are concealed.

Finish:

Frame portion is natural cast aluminum; machined door portion is mill finish.

Application:

1. Use in conjunction with center hung doors with floor closers.
2. Use top and bottom center pivots with surface mounted closer or top pivot only with floor closer.

For use with: Models 20D/35D/50D and 40M/50M.

H-2501 Bottom Center Pivot

STANDARD – BOTTOM CENTER PIVOT

Description:

1. Frame portion (with or without threshold): Extruded machined aluminum with adjustable pin.
2. Threshold portion: Ball bearing, adjustable pivot pin.
3. Without threshold: Stainless steel pivot pin; not adjustable in the pivot housing.
4. Door portion: Steel clamping bolt threaded into cast aluminum pivot block.

Finish:

Mill finish.

Application:

1. Entrances with thresholds: Pivot is anchored to frame and threshold. This frame portion has an adjustable pin for proper door and frame clearance.
2. Entrances without thresholds: Frame portion is securely fastened to frame and directly to floor.
3. Use top and bottom center pivots with surface mounted closer or bottom pivot only with concealed overhead closer.

For use with: Models 20D/35D/50D and 40M/50M.

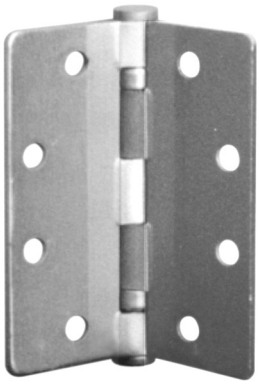

P-1300-SS Butt Hinge

STANDARD – BUTT HINGE, 4-1/2" X 4"

Description:

1. Commercial quality five knuckle, two ball bearing raceway construction type stainless steel; enclosed hinge barrel with button tips incorporating non-rising removable steel pin.
2. Radius corner hinge. Standard template butt, 4-1/2" X 4" X 0.134" thickness (114.3mm by 101.6mm by 3.4mm).
4. Tapped back-up reinforcing plates are provided for each hinge.

Finish:

Standard: Stainless Steel for clear anodized.
Optional: 335 Black finish for color anodized and/or painted finished.

Application:

1. Butt hinge fully mortised into door hinge stile and frame hinge jamb.
2. Back-up or reinforcing plates are used in both frame jamb and hinge stile.
3. Use intermediate butt (1-1/2 pair per leaf) for doors in high traffic areas or for doors over 7'-6" high.

For use with: Models 20D/35D/50D, 25T/35T/50T, 35H/50H, 35HL/50HL, and 25FD.

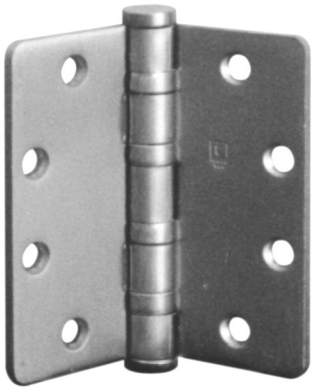

P-1303 Heavy Duty Butt Hinge

HEAVY DUTY–BUTT HINGE, 4-1/2" X 4-1/2"

Description:

1. Grade 1 heavy weight quality. Five knuckle, four ball bearing brass with stainless steel pin. Testing in conformance with ANSI-A156.1-81.
2. Pin is non-rising with optional non-removable (NRP) pin available.
3. Radius corner (RC) hinge. 4-1/2" x 4-1/2" x 0.180" thickness (114.3mm by 114.3mm by 4.6mm)
4. Tapped back-up reinforcing plates are provided for each hinge.

Finish:

628 Clear, for clear anodized or painted surfaces or 335 Black, finish for color anodized and/or painted finished.

Application:

1. Hinge is fully mortised into door hinge stile and frame hinge jamb. On 40M/50M Monumental doors hinge is mortised into the frame, but requires no backer plate for extra strength.
2. Back-up or reinforcing plates are used whenever mortising of hinge is required.
3. Intermediate hinge is standard on all 40M/50M Monumental entrances and recommended on all high traffic applications. Doors over 7'-6" in height also require the use of intermediate hinges.

For use with: Models 40M and 50M.
Optional for Models 20D/35D/50D, 25T/35T/50T, 35H/50H, and 25FD.

P-26103 Continuous Hinge

HEAVY DUTY – CONTINUOUS HINGE

Description:

1. Select® SL 27HD continuous geared aluminum hinge.
2. Continuous geared hinges use a rotating joint to minimize lateral wear on the hinge while evenly distributing door weight along the full length of the frame.
3. Hinge Stile includes mortised edge to allow standard glass formulas to be used.

Finish:

628 Clear, for clear anodized or painted surfaces or 335 Black, finish for color anodized and/or painted finished.

Application:

1. Hinge Stile includes mortised edge to allow standard glass formulas to be used.

For use with: Model 35H/50H.

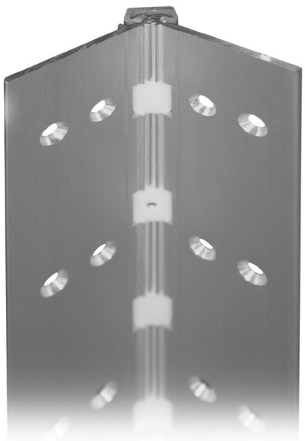

P-26014 Continuous Hinge

HEAVY DUTY–CONTINUOUS HINGE

Description:

1. Roton® 780-226HD continuous geared aluminum hinge .
2. Continuous geared hinges use a rotating joint to minimize lateral wear on the hinge while evenly distributing door weight along the full length of the frame.

Finish:

628 Clear, for clear anodized or painted surfaces or 335 Black, finish for color anodized and/or painted finished.

Application:

1. Hinge Stile includes mortised edge to allow standard glass formulas to be used.

For use with: Models 40M/50M and 35H/50H.

H-20100 Continuous Hinge

STANDARD HEAVY DUTY–CONTINUOUS HINGE

Description:

1. YKK AP Standard continuous geared aluminum hinge.
2. Continuous geared hinges use a rotating joint to minimize lateral wear on the hinge while evenly distributing door weight along the full length of the frame.

Finish:

628 Clear, for clear anodized or painted surfaces or 335 Black, finish for color anodized and/or painted finished.

Application:

1. Active leg of Hinge Stile wraps door stile for greater strength. Specific glass formulas required.

For use with: 35HL/50HL, and 25FD.

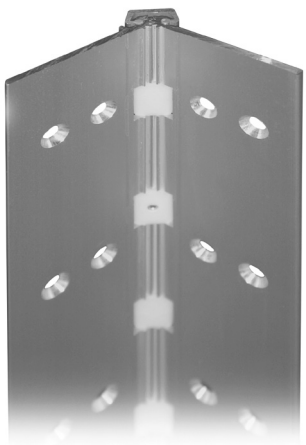

P-26005 Continuous Hinge

HEAVY DUTY–CONTINUOUS HINGE

Description:

1. P-26005 continuous geared aluminum hinge.
2. Continuous geared hinges use a rotating joint to minimize lateral wear on the hinge while evenly distributing door weight along the full length of the frame.
3. Hinge Stile includes mortised edge to allow standard glass formulas to be used.

Finish:

628 Clear, for clear anodized or painted surfaces or 335 Black, finish for color anodized and/or painted finished.

Application:

1. Hinge Stile includes mortised edge to allow standard glass formulas to be used.

For use with: Models 25T/35T/50T.

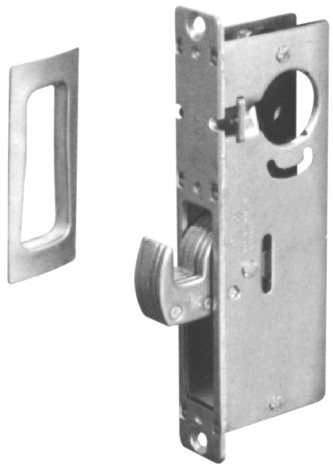

STANDARD – HOOKBOLT

Description:

1. Adams-Rite® MS 1853A-050 series Hookbolt with five ply laminated steel hookbolt; non-handed.
2. Standard backset is 1-1/8" (narrow stile door) or 1-1/2" (medium & wide stile doors).
3. Assembly accepts any standard 1-5/32" diameter mortised cylinder, thumbturn cylinder, or dummy cylinder. All operating cylinder types require MS cam.
4. Requires faceplate on single door.
5. Considered maximum security for YKK AP standard and upgrade locking devices.

H-3201 (1-1/8" backset) **For use with:** Model 20D & 25T.
H-3202 (1-1/2" backset) **For use with:** Models 35D, 50D, 40M, 50M, 35T, 50T, 35H, 50H, 35HL, and 50HL.
Hookbolt with Strike

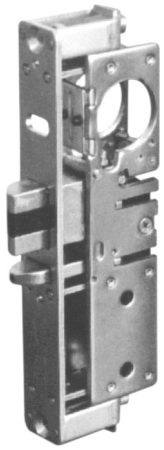

H-3401 (RH)
H-3402 (LH)
Lever Handle

OPTIONAL – DEADLATCH

Description:

1. Adams-Rite® Series 4510 Deadlatch.
2. Standard backset is 1-1/8" (narrow stile door) or 1-1/2" (medium & wide stile doors).
3. Assembly accepts any standard 1-5/32" diameter mortised cylinder, thumbturn cylinder, or dummy cylinder. All operating cylinder types require MS cam.
4. Assembly accepts Adams-Rite 4560 Lever Handle.
5. Requires faceplate and Adams-Rite 4502 Strike.

H-3205 (RH)
H-3206 (LH)
Latch Lock (1-1/8" backset) **For use with:** Model 20D & 25T.

H-3207 (RH)
H-3208 (LH)
Latch Lock (1-1/2" backset) **For use with:** Models 35D, 50D, 40M, 50M, 35T, 50T, 35H, and 50H.

H-4202
5-Pin Cylinder

H-4204
Thumbturn
Cylinder

H-4205
Dummy Cylinder

STANDARD – CYLINDERS

Description:

1. 5 Pin - mortised, 1-5/32" (29.4mm) diameter.
2. Standard cylinders are key operated on the exterior and thumbturn operated on the interior.
3. Blank cylinders available as an option.
4. Keyed alike cylinders are available, when specified.
5. Master keying and special order keying systems are special order; contact factory.

Finish:

Cylinder caps are either 628 Clear, for clear anodized or painted surfaces or 335 Black, finish for color anodized and/or painted finished..

OPTIONAL – CYLINDER GUARD

Description:

1. Adams-Rite® MS 4043 Cylinder Guard; tapered and hardened steel material collar with hardened steel retainer plate.
2. Cylinder guard is collar designed to protect the vulnerable soft brass cylinder. Guard held in place with hardened steel retainer plate for additional security.

Application:

Use with Adams-Rite MS 1850A, MS 1853A-050 or deadlatch series.

For use with: All YKK AP entrances.

H-4206
Cylinder Guard

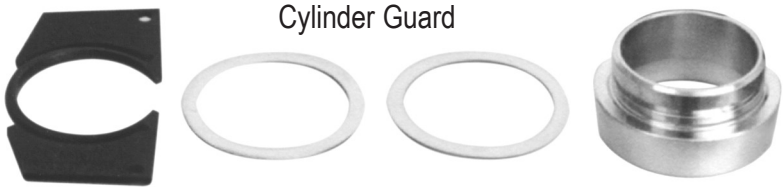

H-4101
Flushbolt

STANDARD – FLUSHBOLT

Description:

Inactive leaf on door pairs:

1. Top and bottom bolts in inactive leaf provide two lock points allowing active door leaf to lock into inactive leaf.
2. Flush bolts are flush mounted in door stile “edge.”

Finish:

Black for color anodized finishes and aluminum color for clear anodized finishes.

For use with: All YKK AP entrances.

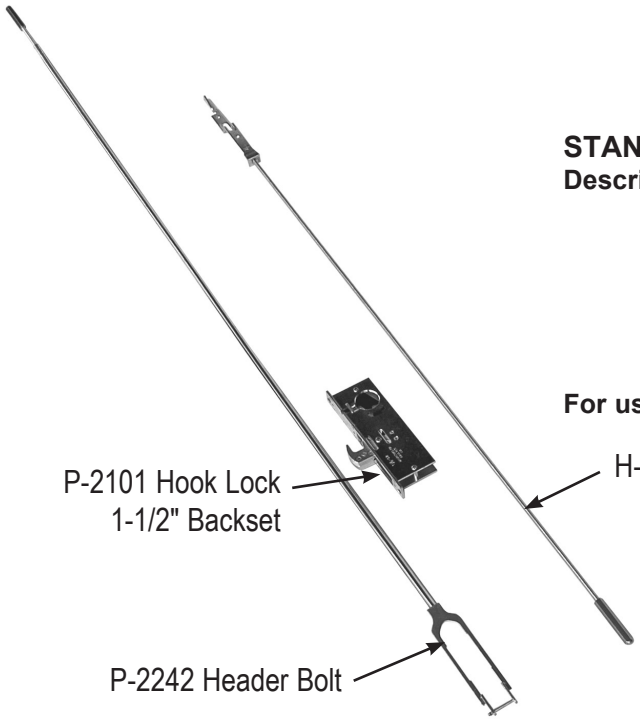

STANDARD – THREE POINT LOCK

Description: Single 35H entrance doors, non-emergency egress, employ a three point locking system to ensure that they remain secured during the strong cyclical winds associated with hurricanes. The three point locking system features a single actuation system for ease of use, keyed exterior cylinder, and interior thumbturn.

For use with: All YKK AP entrances.

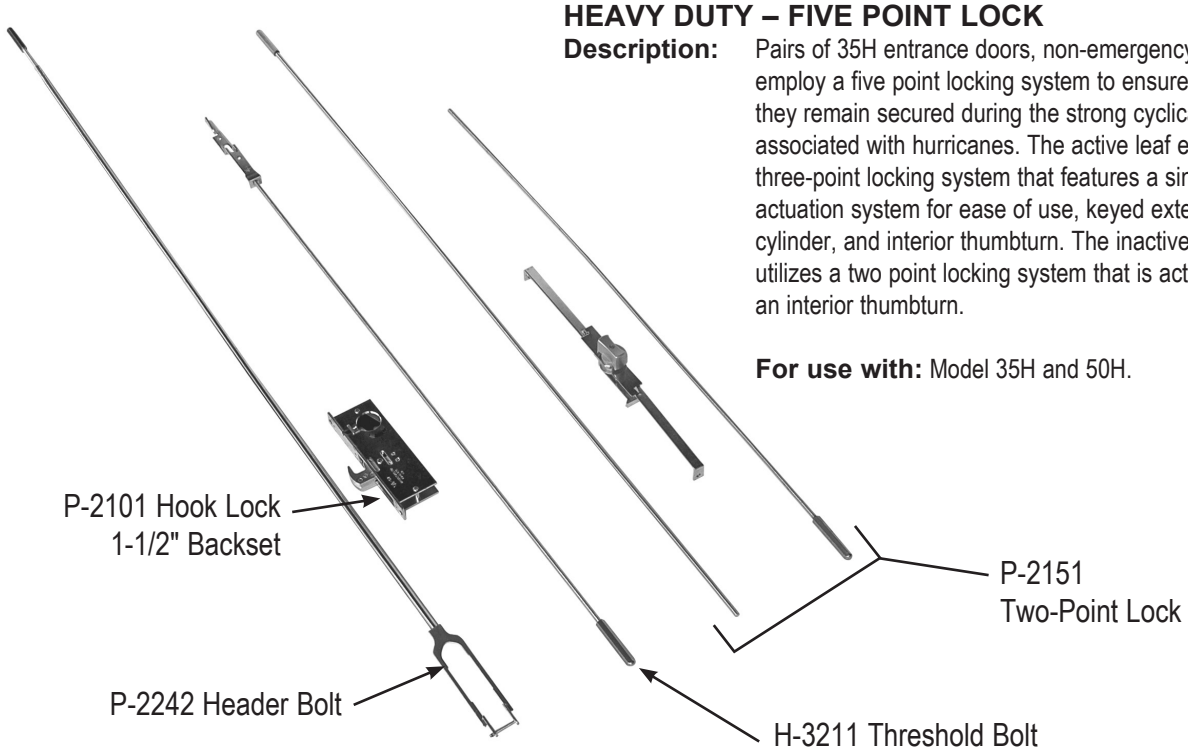

HEAVY DUTY – FIVE POINT LOCK

Description: Pairs of 35H entrance doors, non-emergency egress, employ a five point locking system to ensure that they remain secured during the strong cyclical winds associated with hurricanes. The active leaf employs a three-point locking system that features a single actuation system for ease of use, keyed exterior cylinder, and interior thumbturn. The inactive leaf utilizes a two point locking system that is activated by an interior thumbturn.

For use with: Model 35H and 50H.

STANDARD – PANIC DEVICES

CONCEALED VERTICAL ROD

P-52497 Concealed Panic Device

Description:

1. Concealed Panic Device has concealed vertical lock rods and top latch mechanism in door stile.
2. Depressing touchpad retracts the bottom rod from threshold and releases top latch from transom bar/header mounted barrel strike.
3. Upon closing, top latch re-engages strike securely and frees bottom bolt to engage threshold. Door is then locked from exterior.
4. Panic device can be deactivated or “dogged” with optional cylinder key or allen key in active housing.
5. Housings are cast aluminum with extruded aluminum touchpad. Rim cylinder diameter of 1-5/32" (29.4mm); cylinder specified above.

Finish: Clear and black; painted housing with anodized aluminum touch-pad. Other finishes available on special order; contact factory.

Application:

1. Concealed vertical rod device eliminates removable mullion obstruction on pairs of doors.
2. Device when activated locks entrance on exterior and permits egress from building without the use of key.
3. Touchpad design offers increased building security and reduces the risk of code infringements.

For use with: Models 20D/35D/50D, 40M/50M, 25T/35T/50T, 35HL/50HL, and 35H/50H.

OPTIONAL – PANIC DEVICES

CONCEALED VERTICAL ROD

P-52005
Concealed Panic Device EO
P-52094
Concealed Panic Device NL-OP

P-52107
Concealed Panic Device EO
P-52150
Concealed Panic Device NL-OP

Description:

1. Von Duprin® Concealed Panic Devices have concealed vertical lock rods and top latch mechanism in door stile.
2. Depressing touchpad retracts the bottom rod from threshold and releases top latch from transom bar/header mounted barrel strike.
3. Upon closing, top latch re-engages strike securely and frees bottom bolt to engage threshold. Door is then locked from exterior.
4. Panic device can be deactivated or “dogged” with optional cylinder key or allen key in active housing.
5. Housings are cast aluminum with extruded aluminum touchpad. Rim cylinder diameter of 1-5/32" (29.4mm); cylinder specified above.

Finish: Clear and black; anodized aluminum housing and touchpad. Other finishes available on special order; contact factory.

Application:

1. Concealed vertical rod device eliminates removable mullion obstruction on pairs of doors.
2. Device when activated locks entrance on exterior and permits egress from building without the use of key.
3. Touchpad design offers increased building security and reduces the risk of code infringements.

For use with: Models 20D/35D/50D, 40M/50M, and 25T/35T/50T.

STANDARD – PANIC DEVICES

RIM TYPE

P-54453 Rim Panic Device

Description:

1. Rim Panic Device has latch bolt in rim of active housing engaging adjustable roller strike to provide locking action.
2. Depressing touchpad “unlocks” the device and permits egress. The bolt re-engages the strike and locks when the door closes.
3. On single doors, adjustable strike is mounted on frame lock jamb. Adjustable strike is part of removable mullion required for door pairs.
4. Panic device can be deactivated “dogged” with cylinder key or allen key. Keyed alike cylinders are optional.
5. Rim cylinder diameter of 1-5/32" (29.4mm); cylinder specified above.

Finish: Clear or black pushbar; black housing with anodized aluminum touchpad. Other finishes available on special order; contact factory.

Application:

1. Depressing touchpad permits egress from building without key.
2. Removable mullion is required on pairs of doors. Using optional mullion stabilizers is recommended.
3. Touchpad design offers increased building security and reduces the risk of code infringements.

For use with: Model 20D/35D/50D, 40M/50M, 25T/35T/50T, and 25FD.

OPTIONAL – PANIC DEVICES

RIM TYPE

P-54007
Rim Panic Device EO
P-54004
Rim Panic Device NL-OP

P-54108
Rim Panic Device EO
P-54109
Rim Panic Device NL-OP

Description:

1. Von Duprin® Rim Panic Devices have latch bolt in rim of active housing engaging adjustable roller strike to provide locking action.
2. Depressing touchpad “unlocks” the device and permits egress. The bolt re-engages the strike and locks when the door closes.
3. On single doors, adjustable strike is mounted on frame lock jamb. Adjustable strike is part of removable mullion required for door pairs.
4. Panic device can be deactivated “dogged” with cylinder key or allen key. Keyed alike cylinders are optional.
5. Rim cylinder diameter of 1-5/32" (29.4mm); cylinder specified above.

Finish: Clear and black; anodized aluminum housing and touchpad. Other finishes available on special order; contact factory.

Application:

1. Depressing touchpad permits egress from building without key.
2. Removable mullion is required on pairs of doors. Using optional mullion stabilizers is recommended.
3. Touchpad design offers increased building security and reduces the risk of code infringements.

For use with: P-54007 & P-54004 - All YKK AP entrances.
P-54108 & P-54109 - Model 50D, 50T, 35H, 50H, and 25FD.

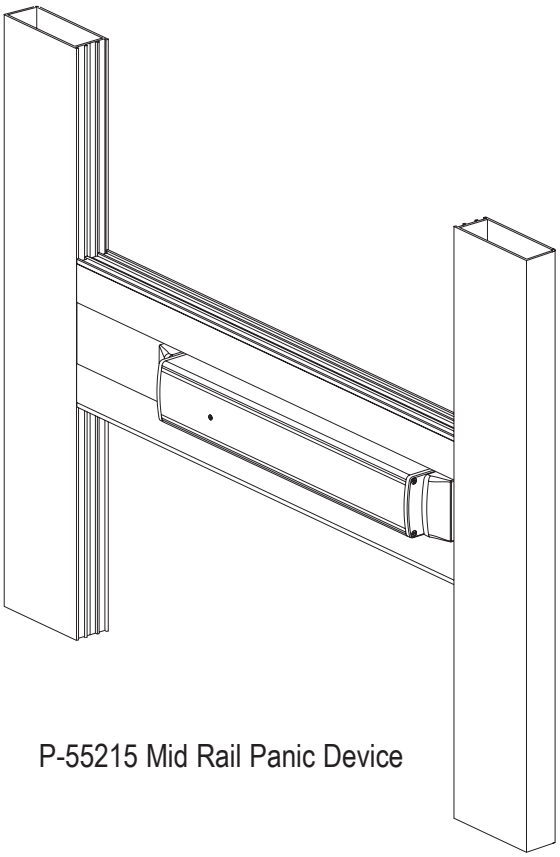

P-55215 Mid Rail Panic Device

OPTIONAL – MID RAIL PANIC DEVICE CONCEALED VERTICAL ROD

Description:

1. Concealed vertical rod with top and bottom (two point) vertical locking rods concealed in door stiles.
2. Depressing the operating panel at any point retracts the bottom rod from threshold and releases the top latch from the transom bar/header mounted strike.
3. Upon closing, top latch re-engages strike securely and frees the bottom bolt to engage the threshold. Door is then locked from the exterior.
4. Panic device can be de-activated or “dogged” with allen key at the locking stile at the end of the operating panel.
5. Housing is a single aluminum extrusion 8-3/4""(222.3mm) in height including glass stops for 1/4" glass, Rim cylinder diameter is 1-5/32" (29.4mm). Housing is pinned and welded into place for added strength.
6. Projection of operating panel is approximately 1" (25.4mm) in locked position and 1/2" (12.7mm) when “dogged.”
7. Panic mechanism is concealed in door cross rail extrusion.

Finish: Operating panel is clear or black anodized aluminum. Cross rail is finished to match door.

For use with: Model 20D/35D/50D, and 40M/50M.

H-1541 Panic Pull

STANDARD – PANIC PULL

Description: Innovatively styled extruded aluminum 1" diameter canted offset pull with 9" O.C. mounting. The open style assists handicapped access and permits easy access to the lock cylinder.

Finish: Clear or black anodized finish.

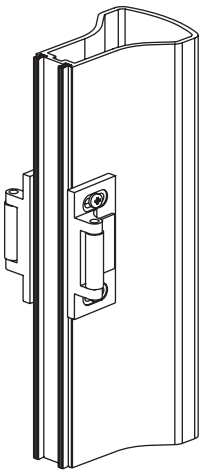

H-5902

STANDARD – REMOVABLE MULLION

Description:

1. YKK AP Removable Aluminum Mullion.
2. Depressing touchpad “unlocks” the device and permits egress. The bolt re-engages the strike and locks when the door closes.
3. On single doors, adjustable strike is mounted on frame lock jamb. Adjustable strike is part of removable mullion required for door pairs.
4. Panic device can be deactivated “dogged” with cylinder key or allen key. Keyed alike cylinders are optional.
5. Rim cylinder diameter of 1-5/32" (29.4mm); cylinder specified above.

Finish: Clear and black; painted housing with anodized aluminum touchpad. Other finishes available on special order; contact factory.

Application:

1. Removable mullion is required on pairs of doors. Using optional mullion stabilizers is recommended.
2. Touchpad design offers increased building security and reduces the risk of code infringements.
3. Steel reinforcement required for use with Model 35H.

For use with: All YKK AP entrances.

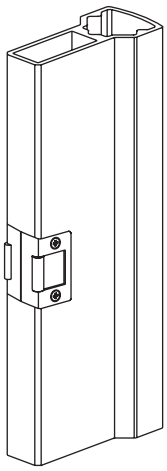

Falcon™ (Dor-O-Matic®) P56410

OPTIONAL – REMOVABLE MULLION

Description:

1. Falcon™ (Dor-O-Matic®) P56410 Removable Aluminum Mullion.
2. Depressing touchpad “unlocks” the device and permits egress. The bolt re-engages the strike and locks when the door closes.
3. On single doors, adjustable strike is mounted on frame lock jamb. Adjustable strike is part of removable mullion required for door pairs.
4. Panic device can be deactivated “dogged” with cylinder key or allen key. Keyed alike cylinders are optional.
5. Rim cylinder diameter of 1-5/32" (29.4mm); cylinder specified above.

Finish: Clear and black; painted housing with anodized aluminum touchpad. Other finishes available on special order; contact factory.

Application:

1. Removable mullion is required on pairs of doors. Using optional mullion stabilizers is recommended.
2. Touchpad design offers increased building security and reduces the risk of code infringements.

For use with: All YKK AP entrances.

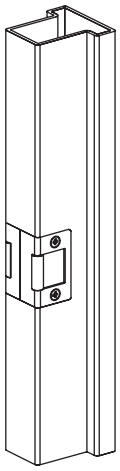

Falcon™ (Dor-O-Matic®) H-5601 / H-5602

OPTIONAL – REMOVABLE MULLION

Description:

1. Falcon™ (Dor-O-Matic®) H-5601 / H-5602 Removable Aluminum Mullions.
2. Depressing touchpad “unlocks” the device and permits egress. The bolt re-engages the strike and locks when the door closes.
3. On single doors, adjustable strike is mounted on frame lock jamb. Adjustable strike is part of removable mullion required for door pairs.
4. Panic device can be deactivated “dogged” with cylinder key or allen key. Keyed alike cylinders are optional.
5. Rim cylinder diameter of 1-5/32" (29.4mm); cylinder specified above.

Finish: Clear and black; painted housing with anodized aluminum touchpad. Other finishes available on special order; contact factory.

Application:

1. Removable mullion is required on pairs of doors. Using optional mullion stabilizers is recommended.
2. Touchpad design offers increased building security and reduces the risk of code infringements.

For use with: All YKK AP entrances.

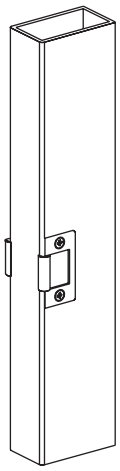

Von Duprin #4954

OPTIONAL – REMOVABLE MULLION

Description:

1. Von Duprin® #4954 Removable Steel Mullion.
2. Depressing touchpad “unlocks” the device and permits egress. The bolt re-engages the strike and locks when the door closes.
3. On single doors, adjustable strike is mounted on frame lock jamb. Adjustable strike is part of removable mullion required for door pairs.
4. Panic device can be deactivated “dogged” with cylinder key or allen key. Keyed alike cylinders are optional.
5. Rim cylinder diameter of 1-5/32" (29.4mm); cylinder specified above.

Finish: Clear and black; painted housing with anodized aluminum touchpad. Other finishes available on special order; contact factory.

Application:

1. Removable mullion is required on pairs of doors. Using optional mullion stabilizers is recommended.
2. Touchpad design offers increased building security and reduces the risk of code infringements.

For use with: Model 50D, 50M, 50T, and 25FD entrances.

H-6100 Series Surface Mounted Closer

STANDARD – SURFACE MOUNTED CLOSERS

Description:

1. Full rack and pinion type with cast aluminum body using non-gumming and non-freezing hydraulic fluid. Closer has two valves, hex key operated to independently regulate closing and latching speeds. Adjustable backcheck is standard on all closers. Closer meets Federal Specs FF-H-121C.
2. Closers are non-handed with or without hold open arms (specify one). All mounting brackets are included.
3. Closers are U.L. listed and meet ANSI A117.1 standards.
4. Closers are BHMA Certified: ANSI A156.4, adjustable sizes 1-6.

Finish: Available in spray painted finish. Available colors are silver (aluminum) and black.

For use with: Models 20D/35D/50D, 40M/50M, 25T/35T/50T, and 25FD.

H-6104 LCN-4040 Series
Surface Mounted Closer

STANDARD – SURFACE MOUNTED CLOSERS

Description:

1. Full rack and pinion type with cast aluminum body using non-gumming and non-freezing hydraulic fluid. Closer shall have two valves, hex key operated to independently regulate closing and latching speeds. Adjustable backcheck is standard on all closers. Closer meets Federal Specs FF-H-121C.
2. Closers are non-handed with or without hold open arms (specify one). All mounting brackets are included.
3. Closers are U.L. listed and meet ANSI A117.1 standards.
4. Closers with optional adjustable spring power for opening force size settings 1 thru 6 are also available.

Finish: Available in spray painted finish. Available colors are silver (aluminum) and black.

For use with: Model 35H/50H.

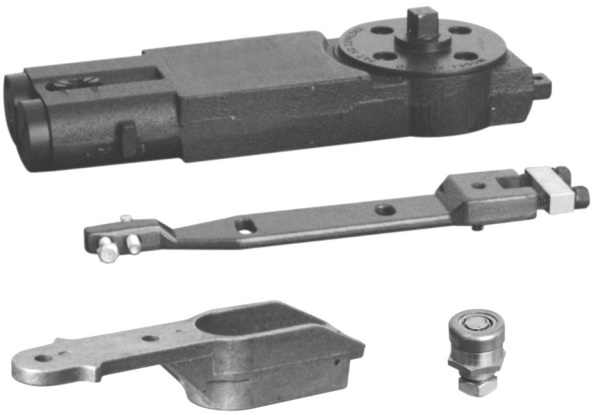

H-6201 thru H-6204, H-6209 thru 6212
Overhead Concealed Closer for Center Pivot

For use with: Models 20D/35D/50D and 40M/50M.

STANDARD – CONCEALED OVERHEAD CLOSERS

Description:

1. Single and double acting non-handed concealed door closer. Closer fits 1-3/4" x 4" (44.5mm by 101.6mm) transom bar or header. Closers have 90 degree or 105 degree back stop with optional hold open device, (specify).
2. Closers are two speed type with factory preset closing speed and adjustable latching speed.
3. Closers are center pivoted type, single or double acting, or offset type for use with standard offset pivots or butt hinges.
4. Available with light and heavy duty spring and also with adjustable spring.

Finish: Available in spray painted finish. Available colors are silver (aluminum) and black.

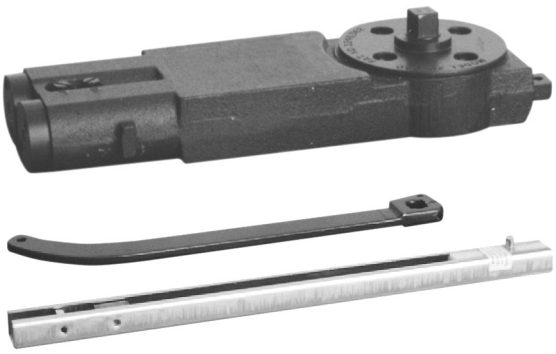

H-6205 thru 6208 Overhead Concealed
Closer for Offset Pivot and Butt Hinge

For use with: Model 20D/35D/50D, 40M/50M, 25T/35T/50T, and 35H/50H.

H-6253 thru H-6260 Adjustable Overhead Concealed Closer
to conform with ADA.

For use with: Model 20D/35D/50D

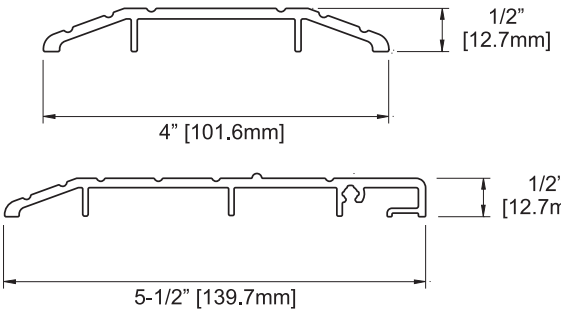

THRESHOLDS

Description:

1. Factory fabricated extruded aluminum; factory prepped for specified hinging and locking hardware; (specify).
2. Standard threshold: 4" (101.6mm) wide x 1/2" (12.7mm) high by width required.

Finish: Mill finish.

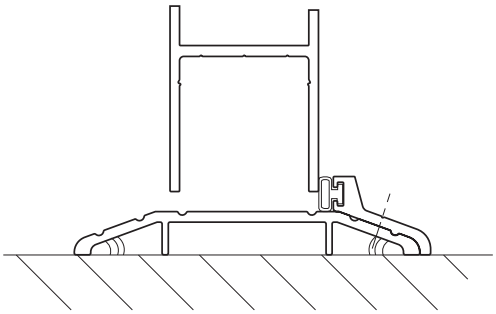

THRESHOLD STOP

Description: Surface applied stop. Screw applied with gasket to 1/2" (12.7mm) high threshold.

Finish: Mill finish.

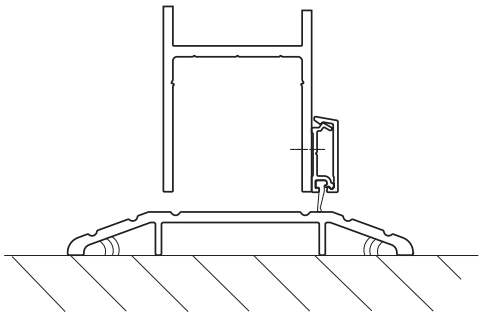

H-7107

WEATHER-STRIPPING
BOTTOM DOOR SWEEPS

Description: Extruded aluminum, surface applied weather-strip with elastomer sweep and concealed fasteners; applied to bottom interior door rail.

Finish: Clear or black anodized finish. Painted finishes available to match door.

Length: 3'-0" to 4'-0"

H-7107 (Finish Code) 0300	3'-0"
H-7107 (Finish Code) 0400	4'-0"

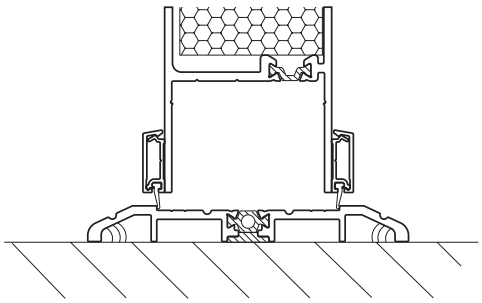

BE9-1535

NOTE: Model 35H and 50H require sweep at exterior for air and water threshold.