YKK AP America Inc.

YOW 225 TUH - Window System
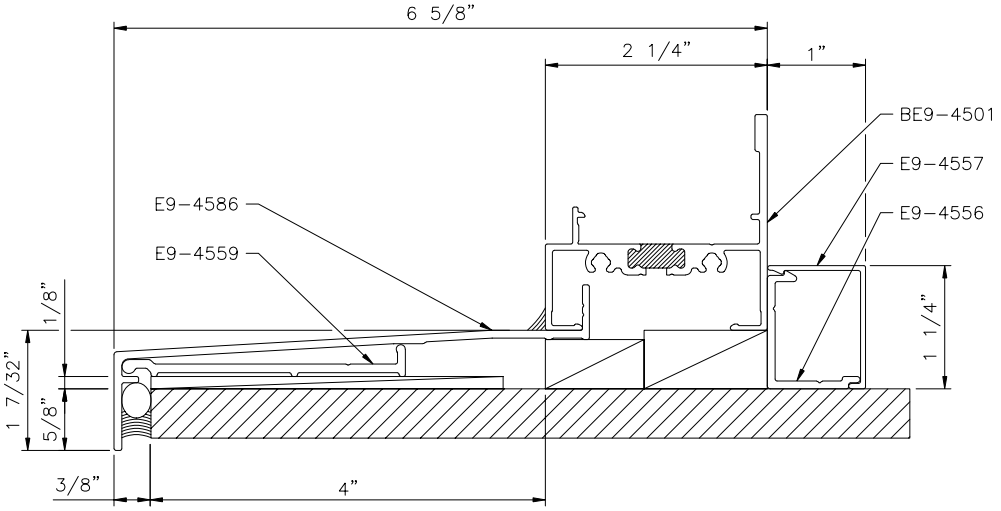
6-5/8" SILL EXTENDER W/ BOW TRIM